JANUARY 25, 2002 (P= -9.14, Bo = -5.47, Lo = 123.68)

KITT PEAK MAGNETOGRAM

N **868.8 nm**

Bright = +
Dark = -

E--

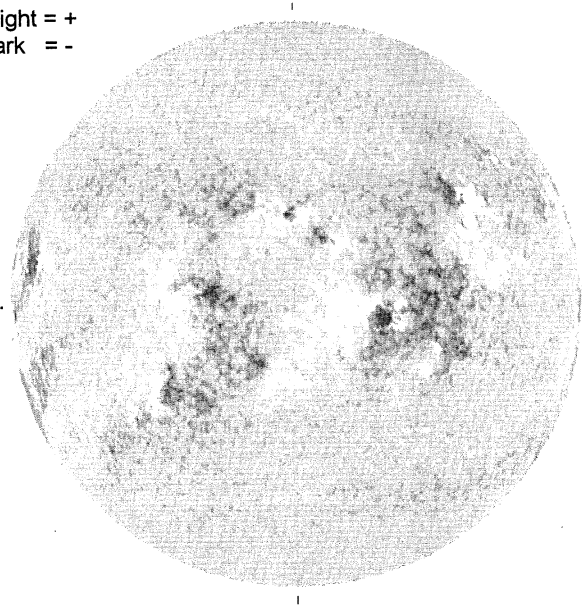

1631 UT

STANFORD MAGNETOGRAM

N

Solid = +
Dashed = -

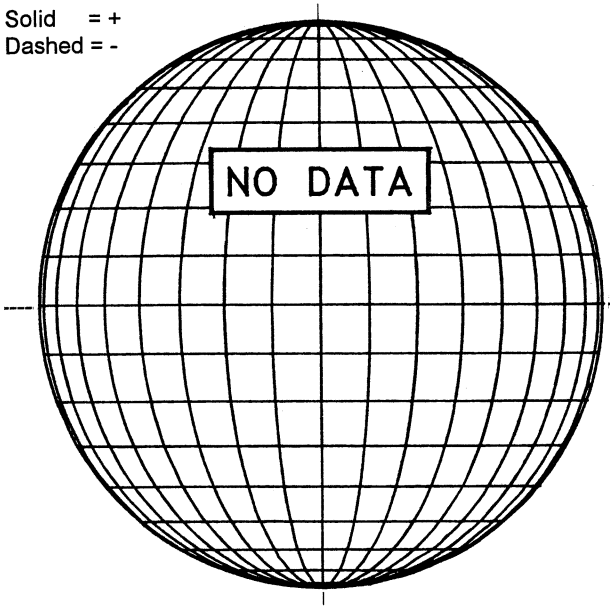

MT. WILSON MAGNETOGRAM

N

DeltaY =
DeltaX =

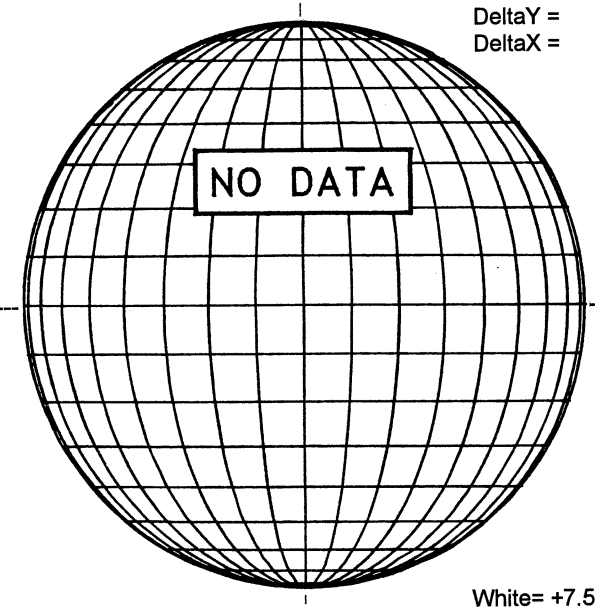

-W

White= +7.5G
Black = -7.5G

MEUDON H-ALPHA

E

1056 UT

S

RAMEY SUNSPOT

RAMEY SUNSPOTS
January 25, 2002
12:22 UT Fair
Bp = -5.5
Po = -9.3
Lo = 116.9

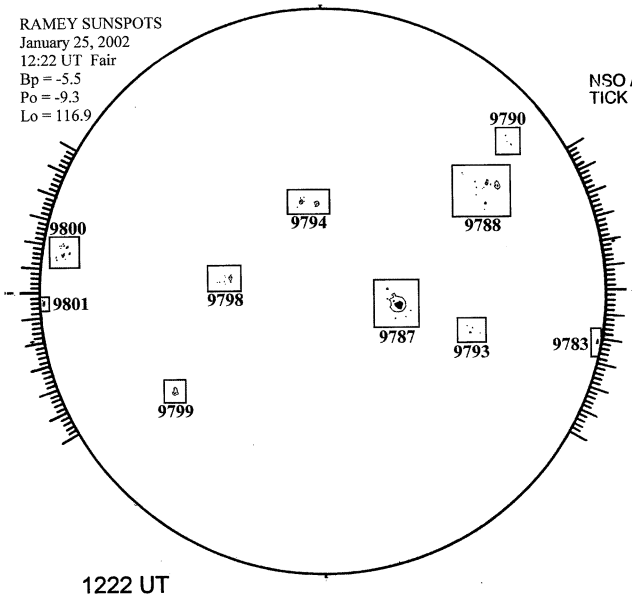

1222 UT

S

SACRAMENTO PEAK CORONA (1.15 Radii)----

NSO / SACRAMENTO PEAK CORONAL DATA
TICK MARKS EVERY 20 MILLIONTHS

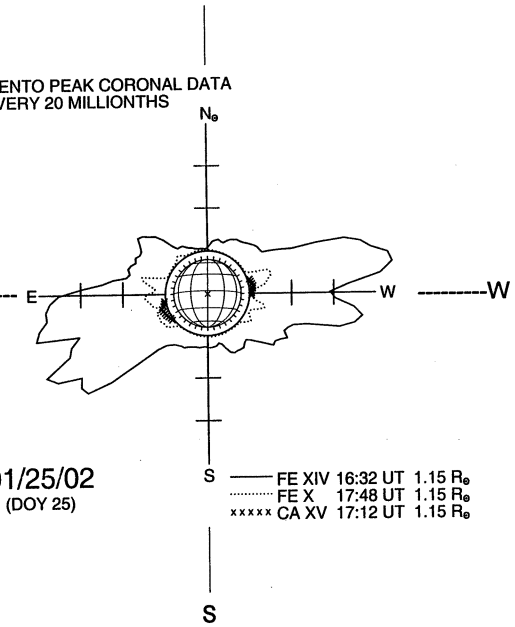

01/25/02
(DOY 25)

FE XIV 16:32 UT 1.15 $R_\odot$
FE X 17:48 UT 1.15 $R_\odot$
xxxxx CA XV 17:12 UT 1.15 $R_\odot$