JANUARY 23, 2002 (P= -8.26, Bo = -5.30, Lo = 150.01)

KITT PEAK MAGNETOGRAM

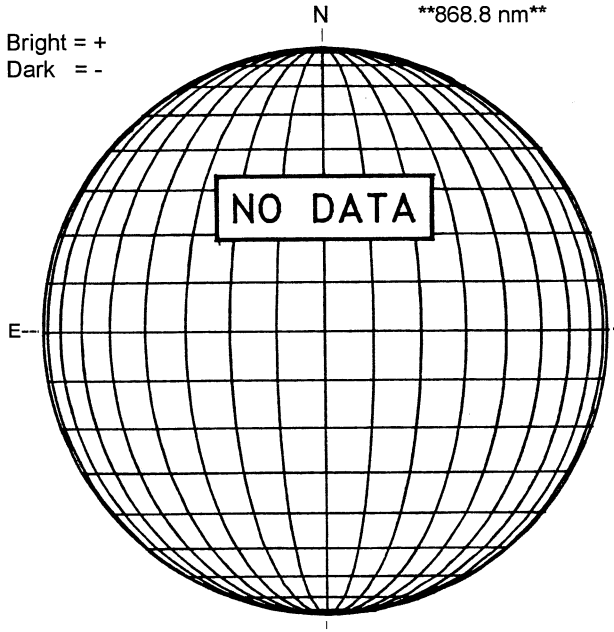

STANFORD MAGNETOGRAM

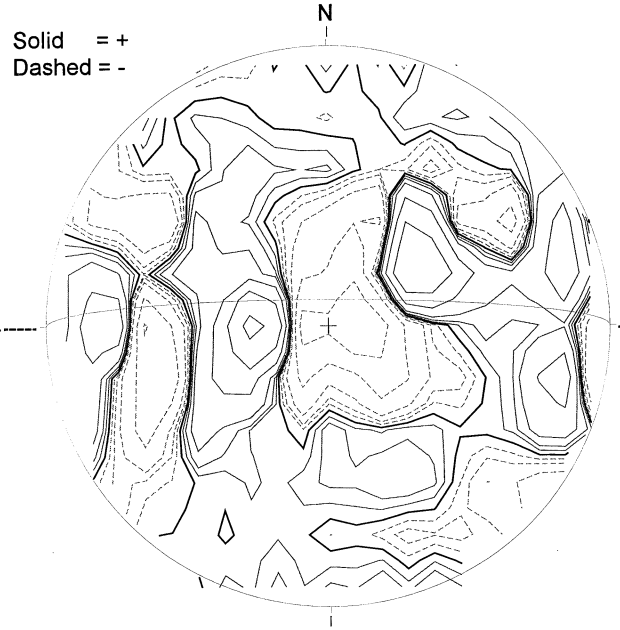

2134 UT

MT. WILSON MAGNETOGRAM

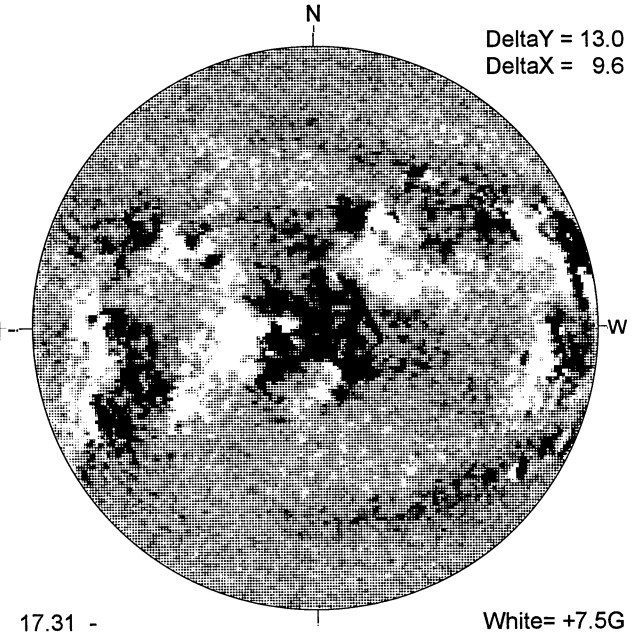

17.31 -
18.29 UT

MEUDON H-ALPHA

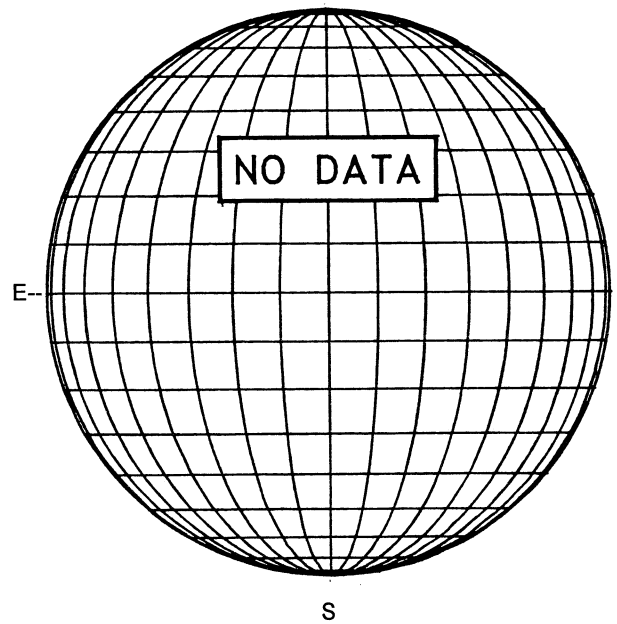

RAMEY SUNSPOT

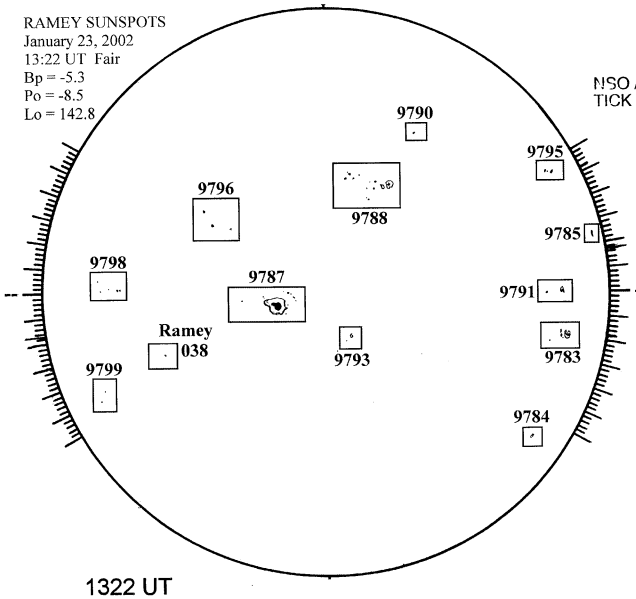

1322 UT

SACRAMENTO PEAK CORONA (1.15 Radii)----

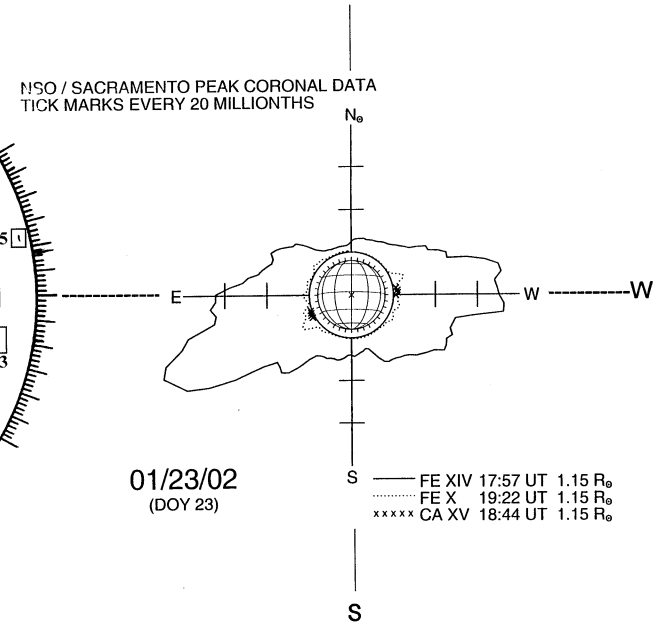

01/23/02
(DOY 23)