JANUARY 22, 2002 (P= -7.81, Bo = -5.21, Lo = 163.18)

KITT PEAK MAGNETOGRAM

N **868.8 nm**

Bright = +
Dark = -

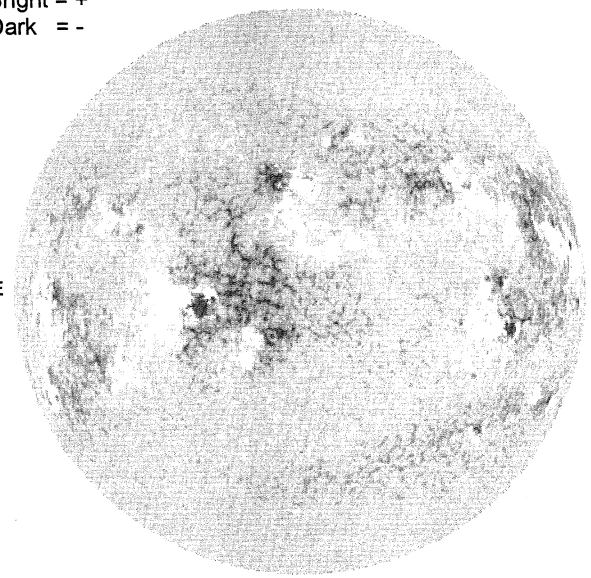

E

1620 UT

STANFORD MAGNETOGRAM

N

Solid = +
Dashed = -

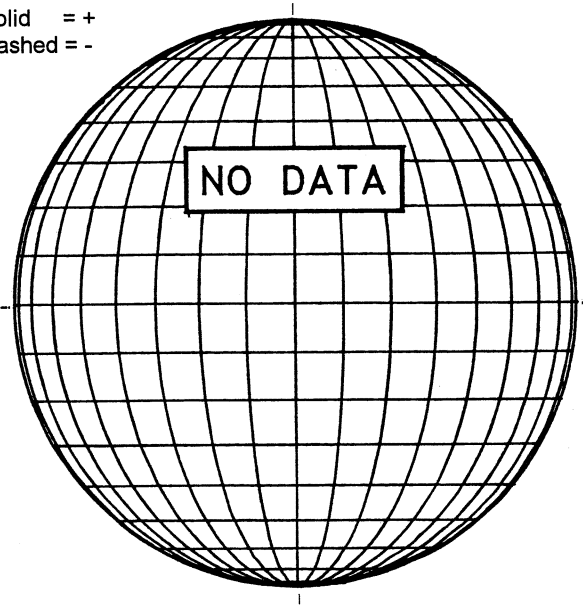

MT. WILSON MAGNETOGRAM

N

DeltaY =
DeltaX =

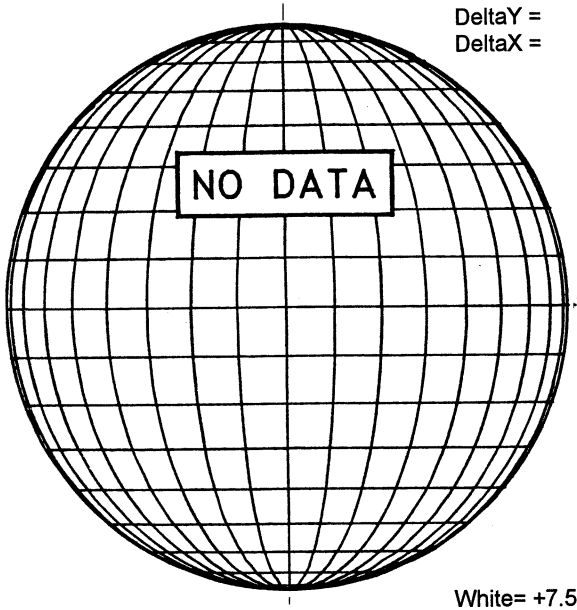

W

White= +7.5G
Black = -7.5G

MEUDON H-ALPHA

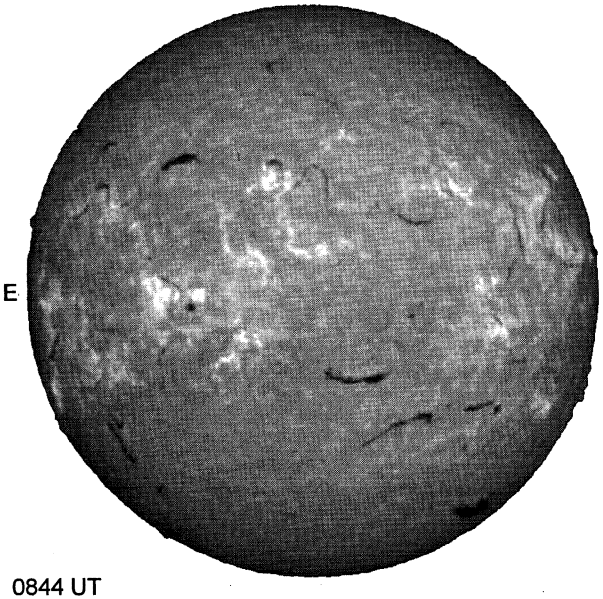

E

0844 UT

S

RAMEY SUNSPOT

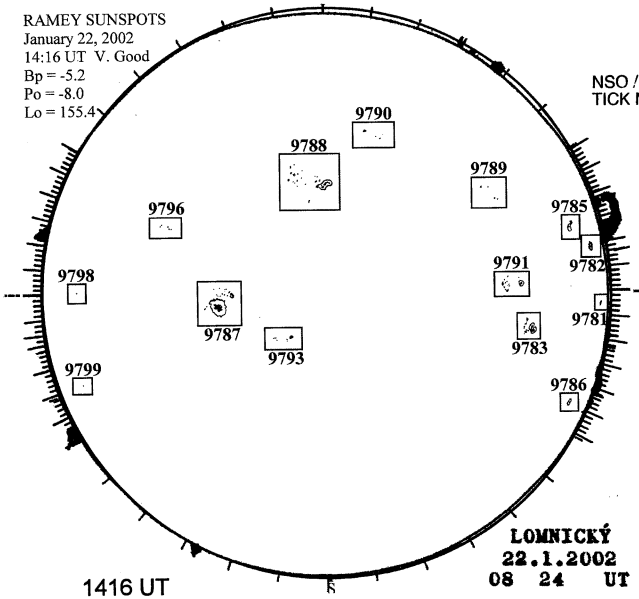

1416 UT
0824 UT LOMN Prom

S

SACRAMENTO PEAK CORONA (1.15 Radii)

NSO / SACRAMENTO PEAK CORONAL DATA
TICK MARKS EVERY 20 MILLIONTHS

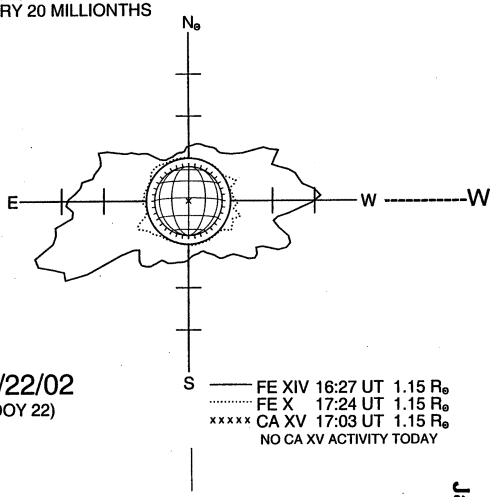

01/22/02
(DOY 22)

FE XIV 16:27 UT 1.15 $R_\odot$
FE X 17:24 UT 1.15 $R_\odot$
CA XV 17:03 UT 1.15 $R_\odot$
NO CA XV ACTIVITY TODAY

S