JANUARY 18, 2002 (P= -5.99, Bo = -4.84, Lo = 215.85)

KITT PEAK MAGNETOGRAM

N

868.8 nm

Bright = +
Dark = -

E-

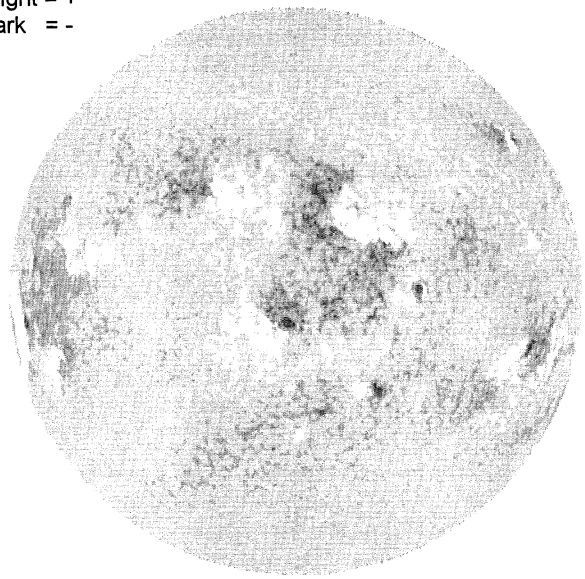

1748 UT

STANFORD MAGNETOGRAM

N

Solid = +
Dashed = -

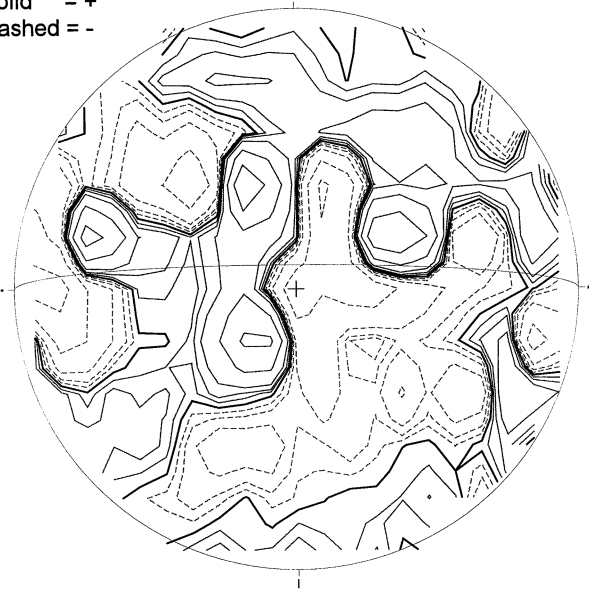

2216 UT

MT. WILSON MAGNETOGRAM

N

DeltaY = 13.1
DeltaX = 9.6

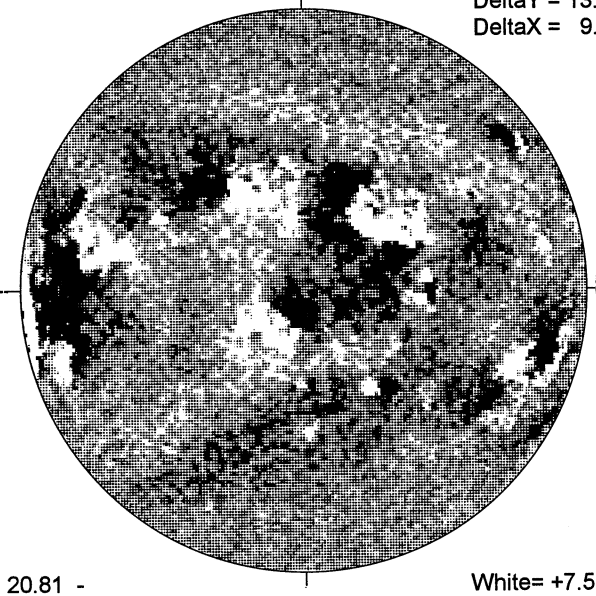

-W

20.81 -
21.78 UT

White= +7.5G
Black = -7.5G

MEUDON H-ALPHA

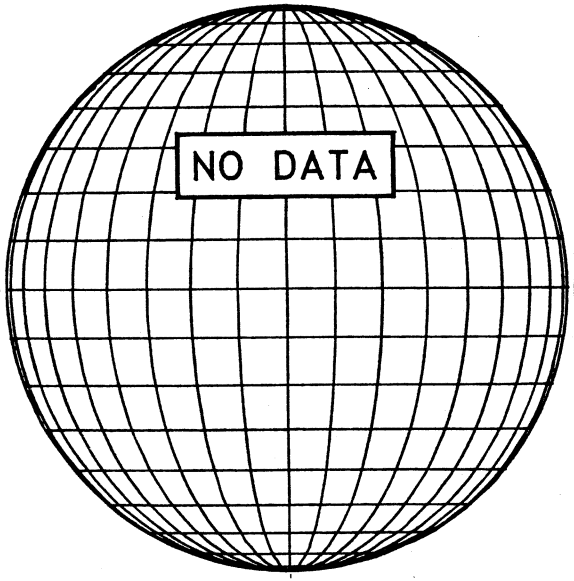

E--

S

RAMEY SUNSPOT

RAMEY SUNSPOTS
January 18, 2002
13:56 UT Fair
Bp = -4.8
Po = -6.2
Lo = 209.3

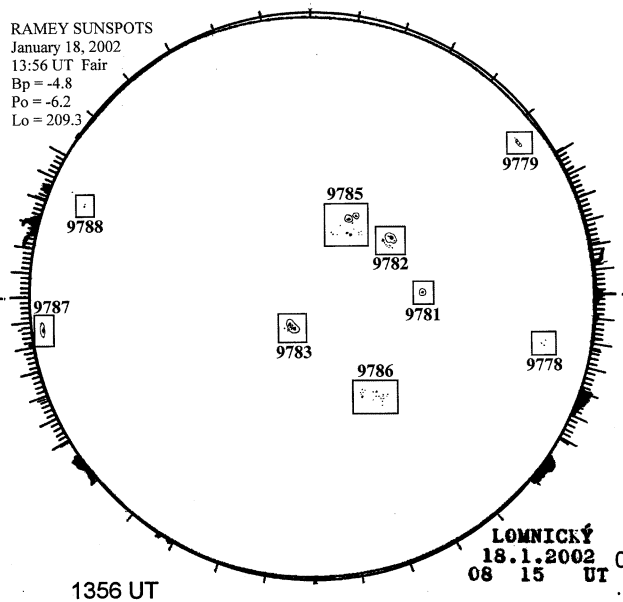

1356 UT
0815 UT LOMN Prom S

LOMNICKY PEAK CORONA (1.04 Radii)----

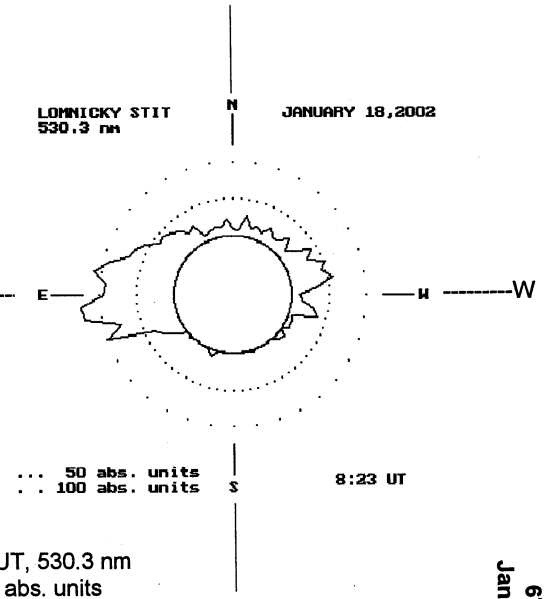

0833 UT, 530.3 nm
.... 50 abs. units
. . 100 abs. units

S