JANUARY 11, 2002 (P= -2.70, Bo = -4.13, Lo = 308.02)

KITT PEAK MAGNETOGRAM

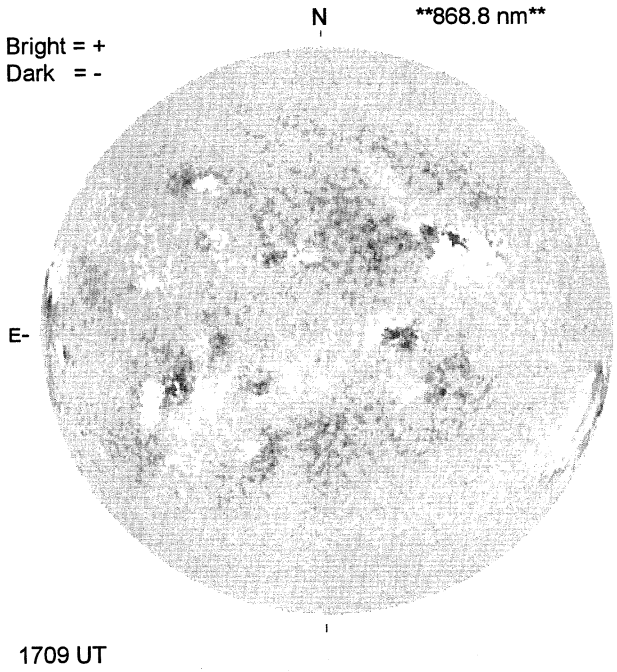

STANFORD MAGNETOGRAM

MT. WILSON MAGNETOGRAM

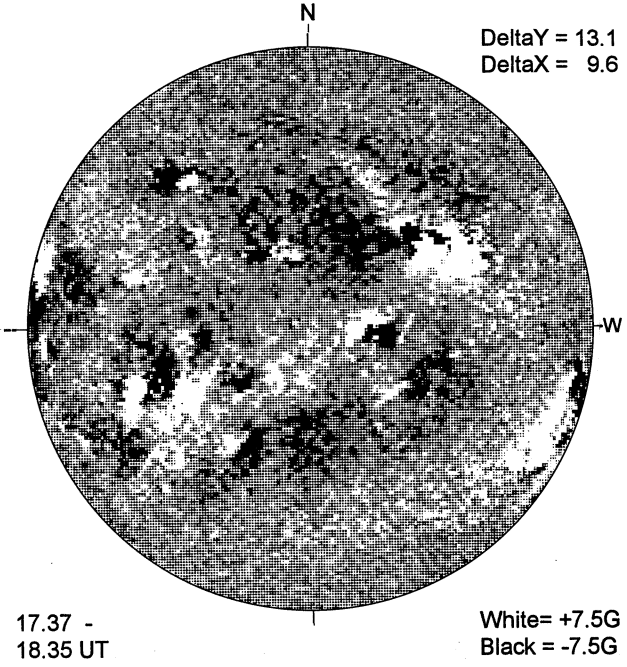

MEUDON H-ALPHA

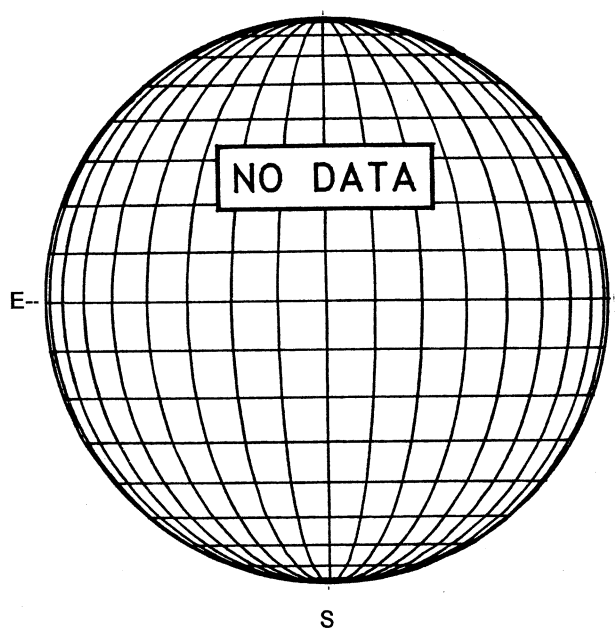

RAMEY SUNSPOTS

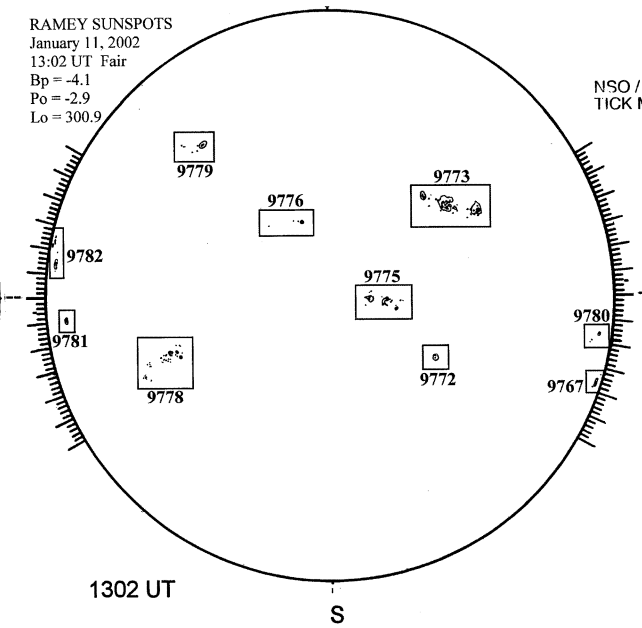
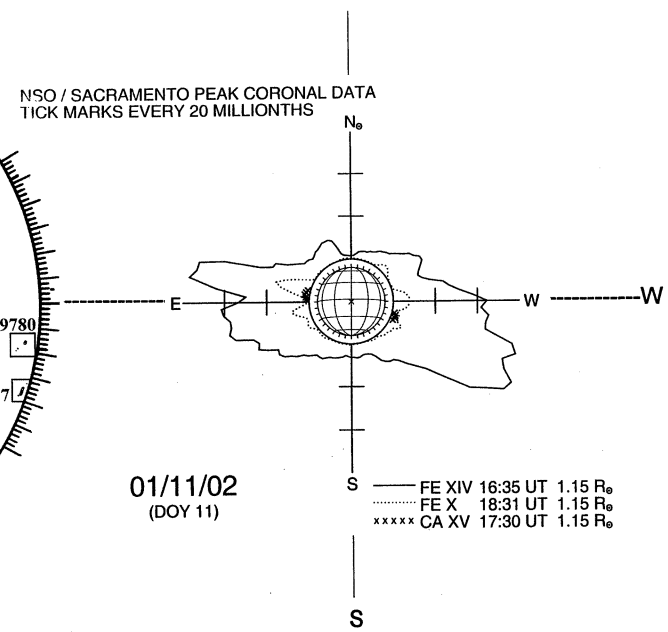
SACRAMENTO PEAK CORONA (1.15 Radii)----