JANUARY 10, 2002 (P= -2.22, Bo = -4.02 Lo = 321.19)

KITT PEAK MAGNETOGRAM

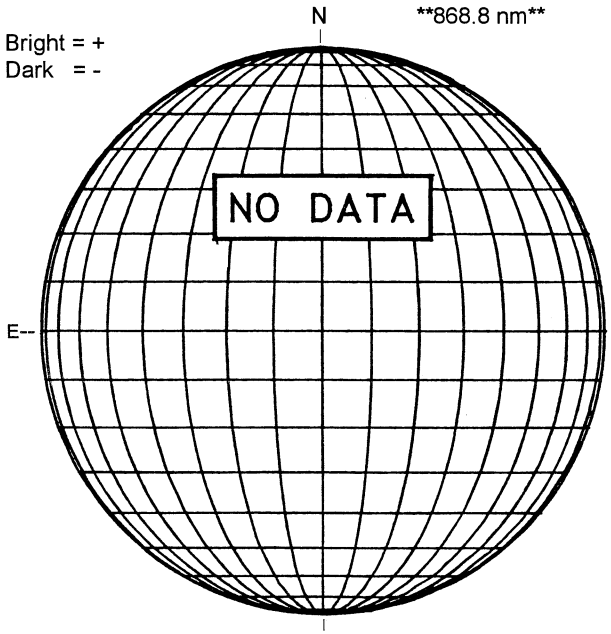

STANFORD MAGNETOGRAM

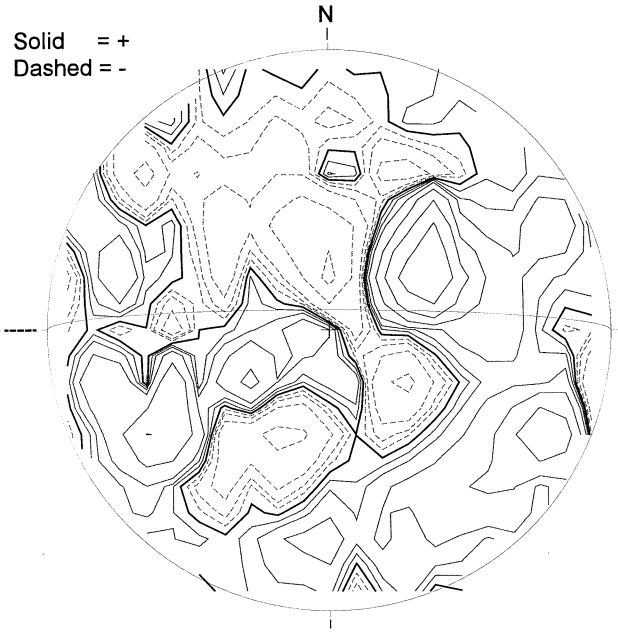

MT. WILSON MAGNETOGRAM

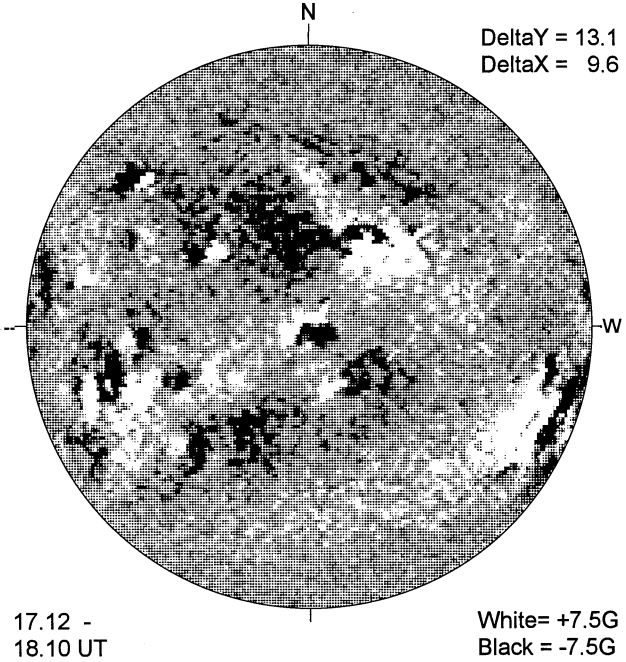

MEUDON H-ALPHA

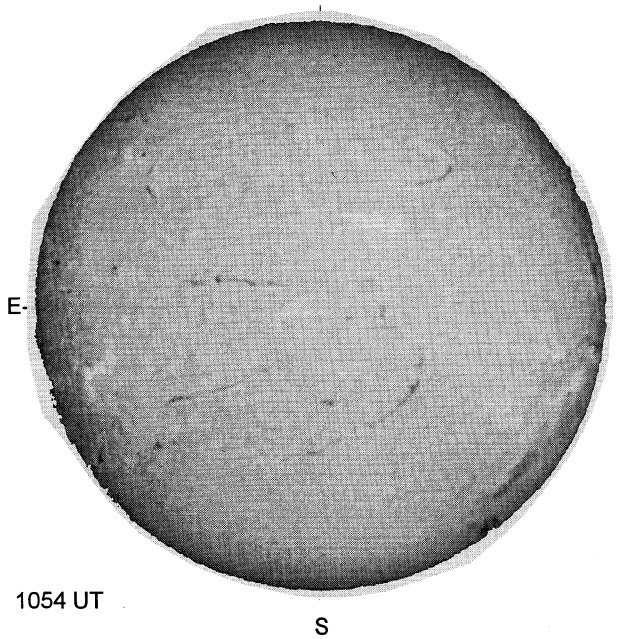

RAMEY SUNSPOTS

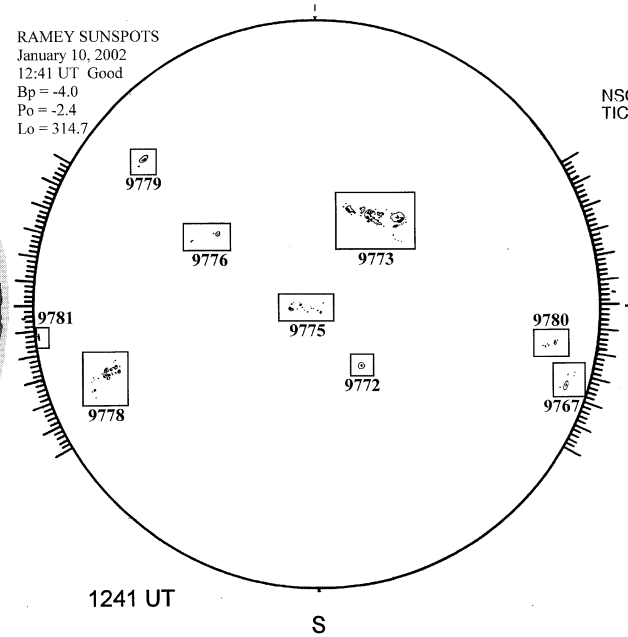
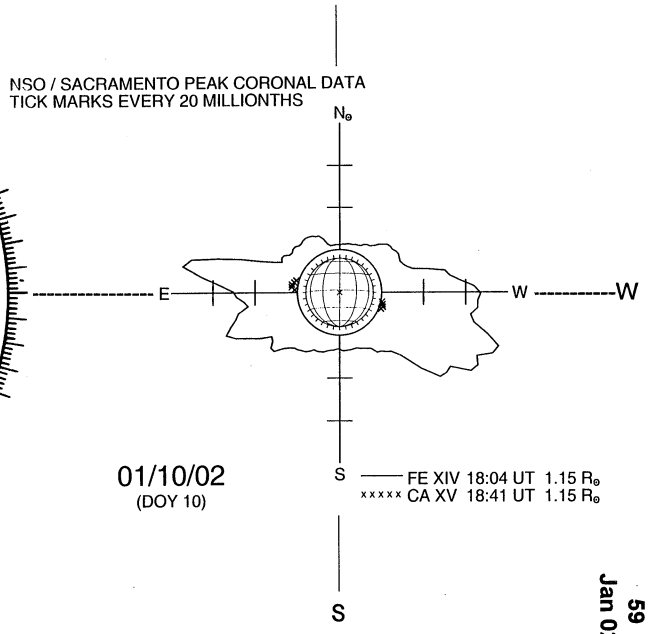
SACRAMENTO PEAK CORONA (1.15 Radii)----