JANUARY 9, 2002 (P= -1.74, Bo = -3.92, Lo = 334.35)

KITT PEAK MAGNETOGRAM

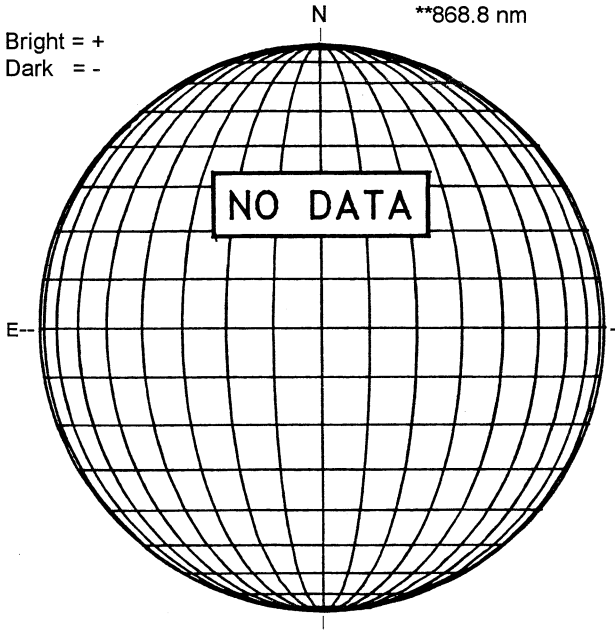

STANFORD MAGNETOGRAM

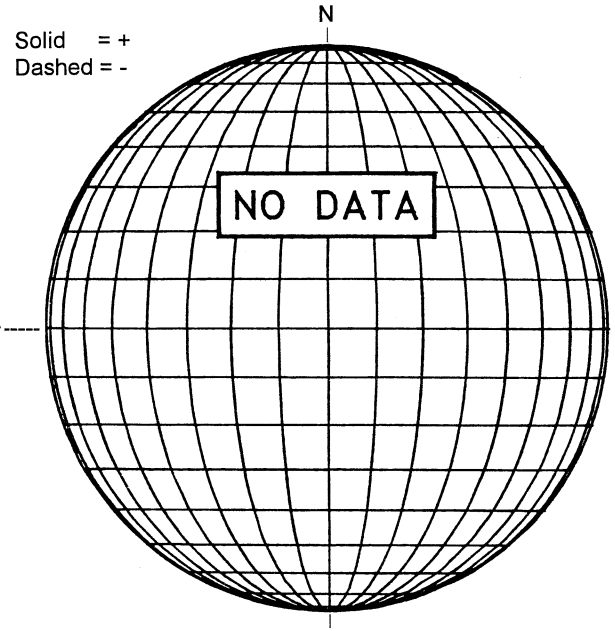

MT. WILSON MAGNETOGRAM

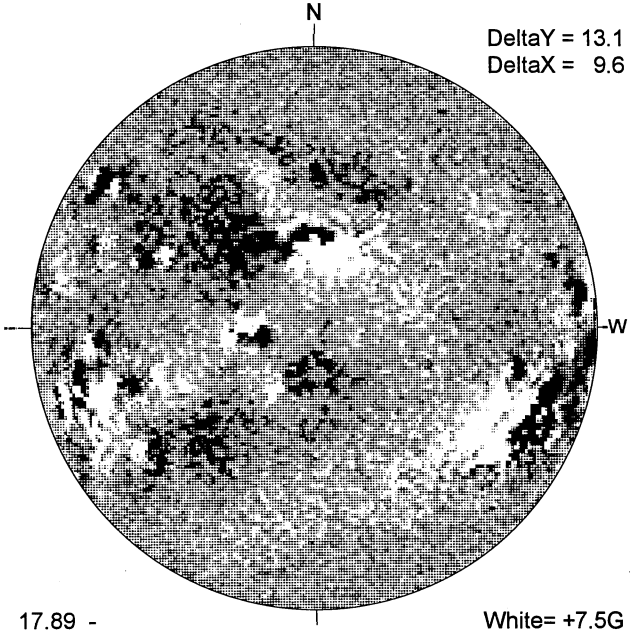

MEUDON H-ALPHA

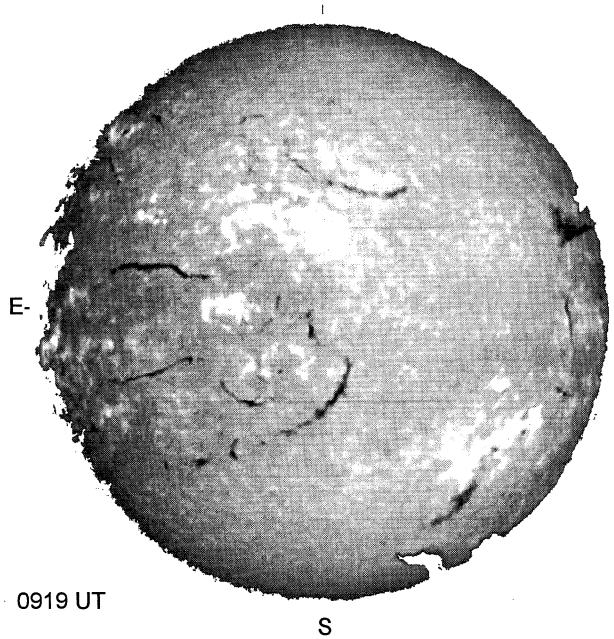

RAMEY SUNSPOT

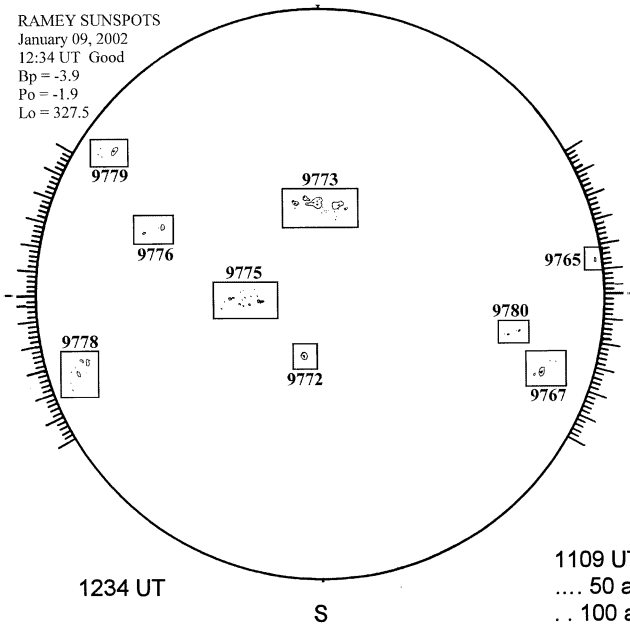

LOMNICKY PEAK CORONA (1.04 Radii)----

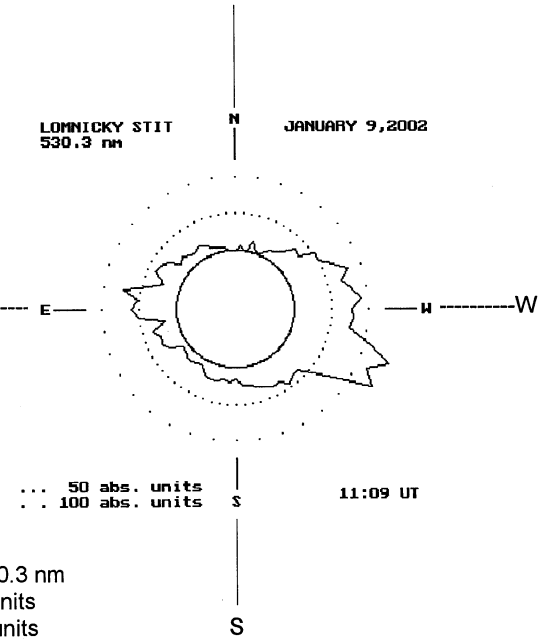

1109 UT, 530.3 nm
.... 50 abs. units
. . 100 abs. units