DECEMBER 26, 2001 (P= 5.03, Bo = -2.29, Lo = 158.74)

KITT PEAK MAGNETOGRAM

868.8 nm

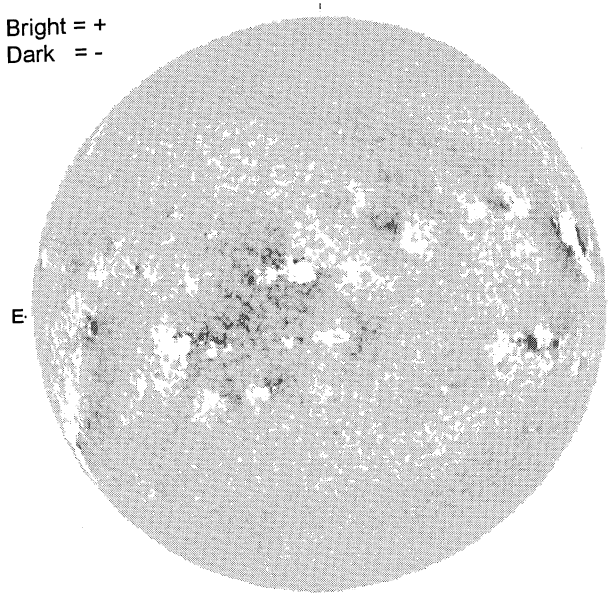

1612 UT

STANFORD MAGNETOGRAM

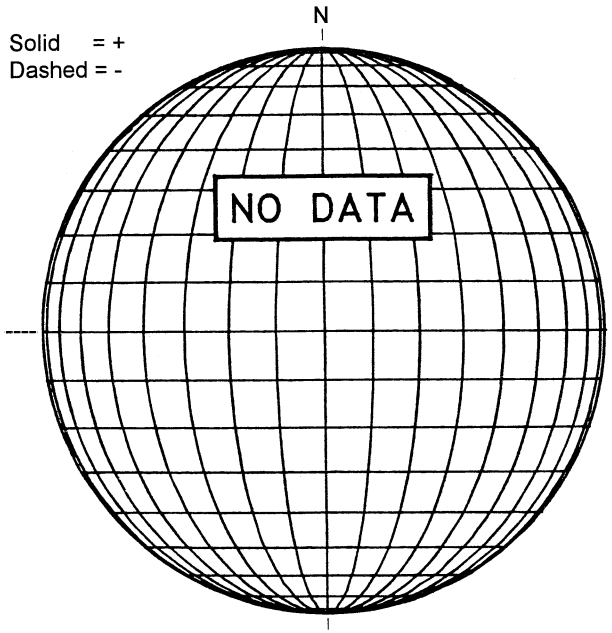

MT. WILSON MAGNETOGRAM

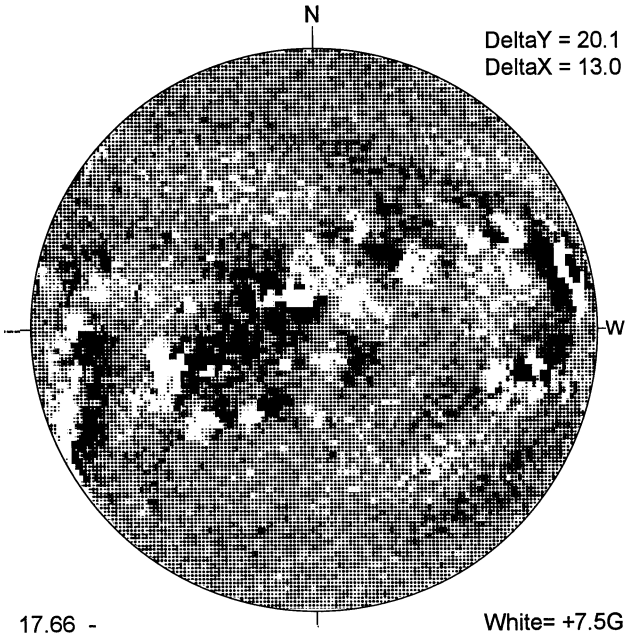

17.66 -
18.09 UT

White= +7.5G
Black = -7.5G

MEUDON H-ALPHA

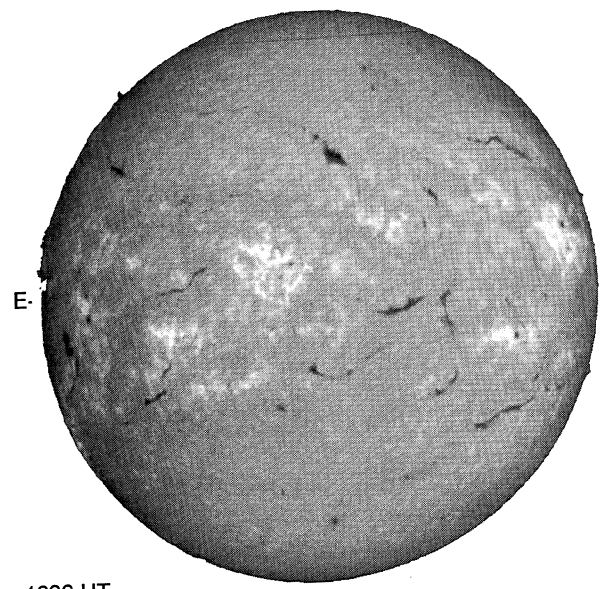

1036 UT

S

RAMEY SUNSPOT

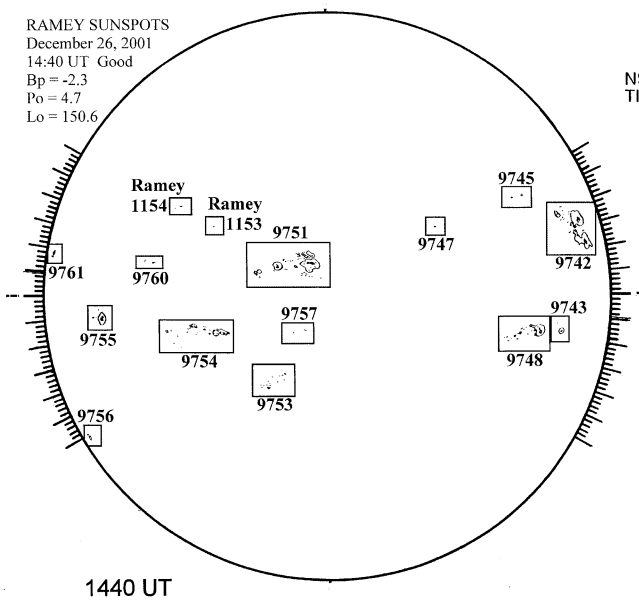

1440 UT

S

SACRAMENTO PEAK CORONA (1.15 Radii)----

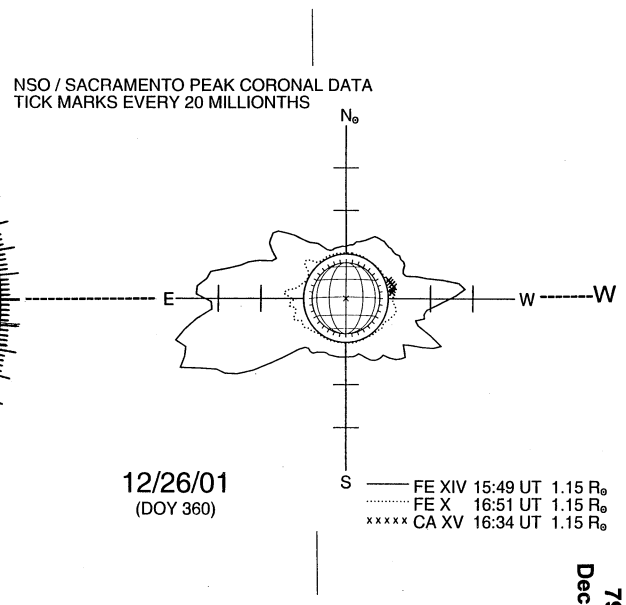

12/26/01
(DOY 360)

S

79
Dec 01