DECEMBER 20, 2001 (P= 7.88, Bo = -1.55, Lo = 237.78)

KITT PEAK MAGNETOGRAM

868.8 nm

Bright = +
Dark = -

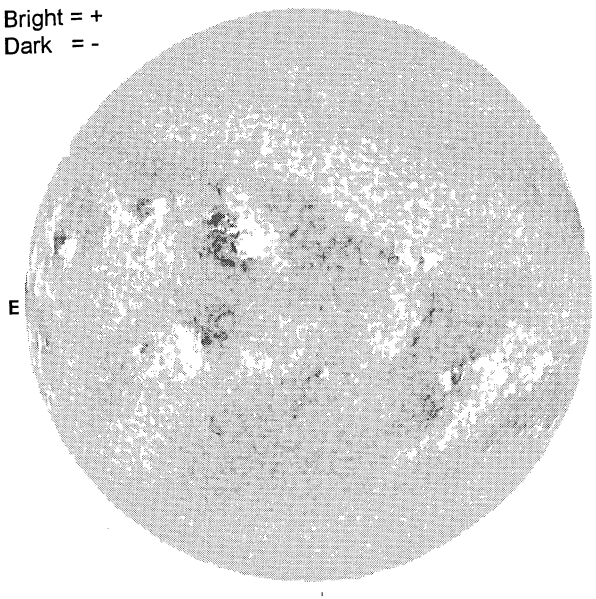

1621 UT

STANFORD MAGNETOGRAM

Solid = +
Dashed = -

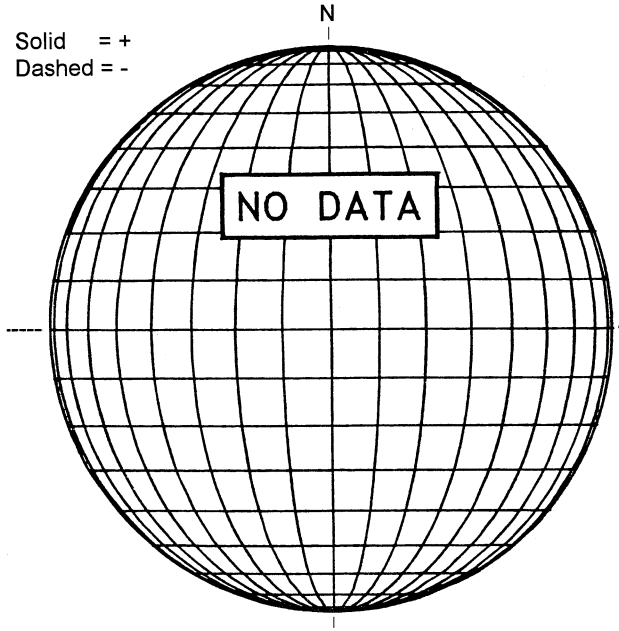

MT. WILSON MAGNETOGRAM

DeltaY =
DeltaX =

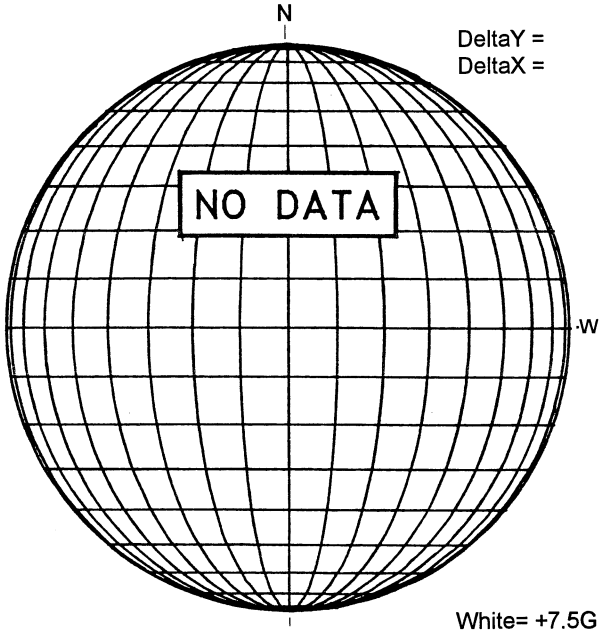

White= +7.5G
Black = -7.5G

MEUDON H-ALPHA

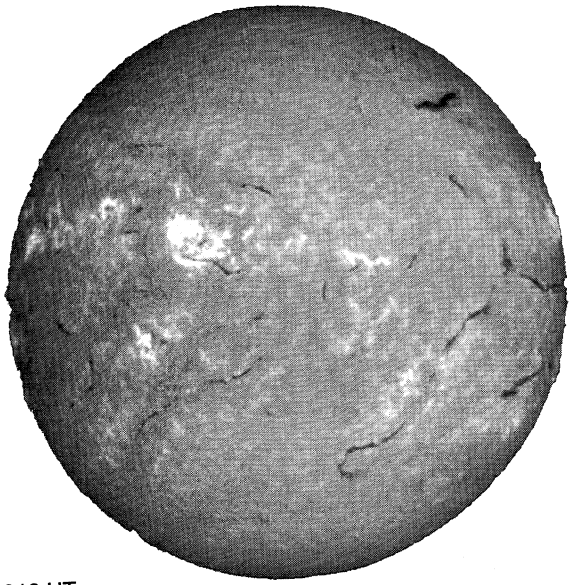

0910 UT

S

RAMEY SUNSPOT

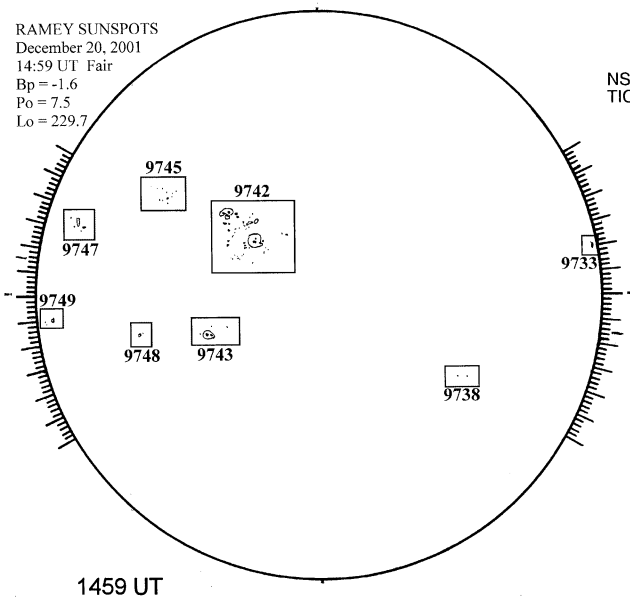

1459 UT

S

SACRAMENTO PEAK CORONA (1.15 Radii)

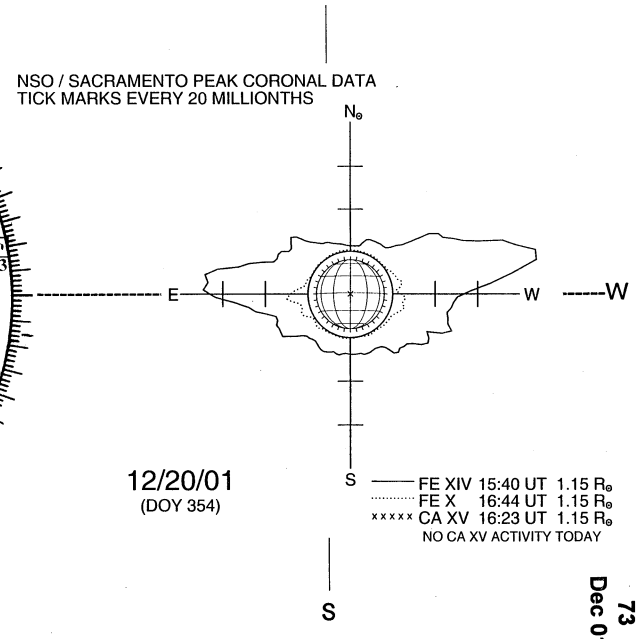

S