DECEMBER 19, 2001 (P= 8.35, Bo = -1.42, Lo = 250.95)

KITT PEAK MAGNETOGRAM

868.8 nm

Bright = +
Dark = -

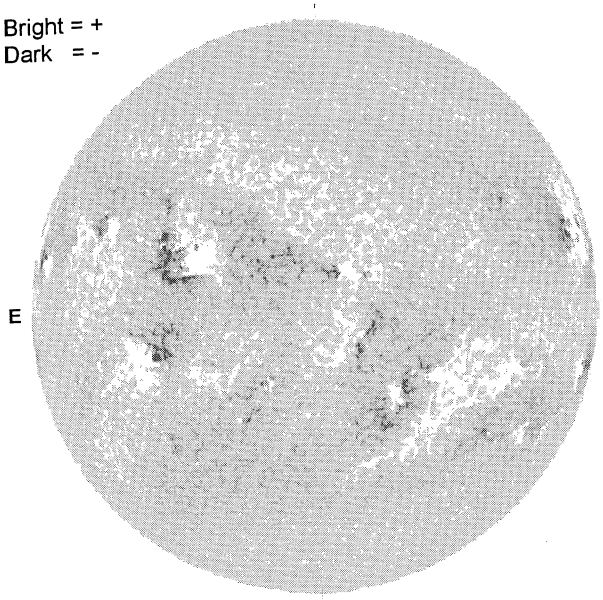

1558 UT

STANFORD MAGNETOGRAM

Solid = +
Dashed = -

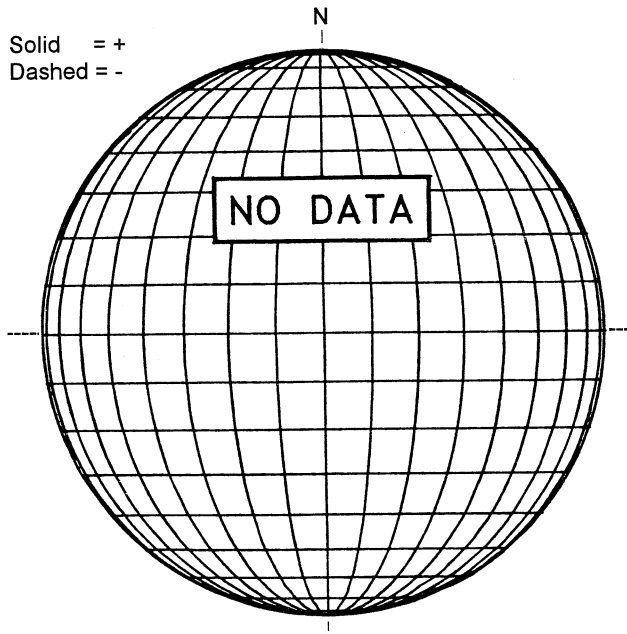

MT. WILSON MAGNETOGRAM

DeltaY = 13.1
DeltaX = 9.6

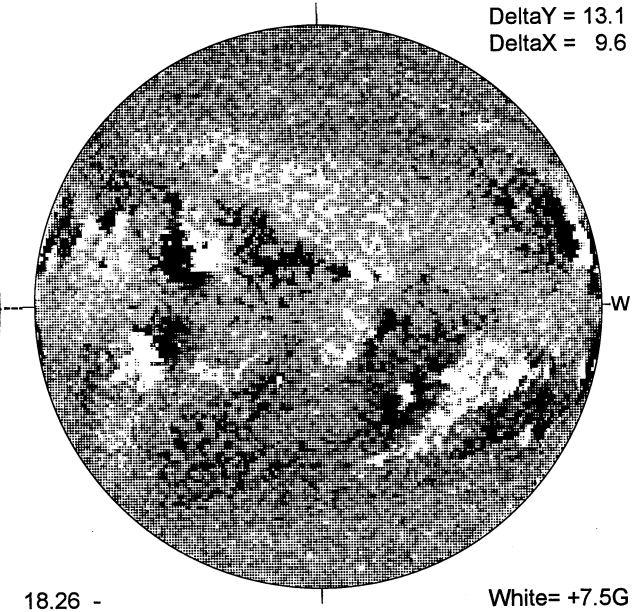

18.26 -
19.23 UT

White= +7.5G
Black = -7.5G

MEUDON H-ALPHA

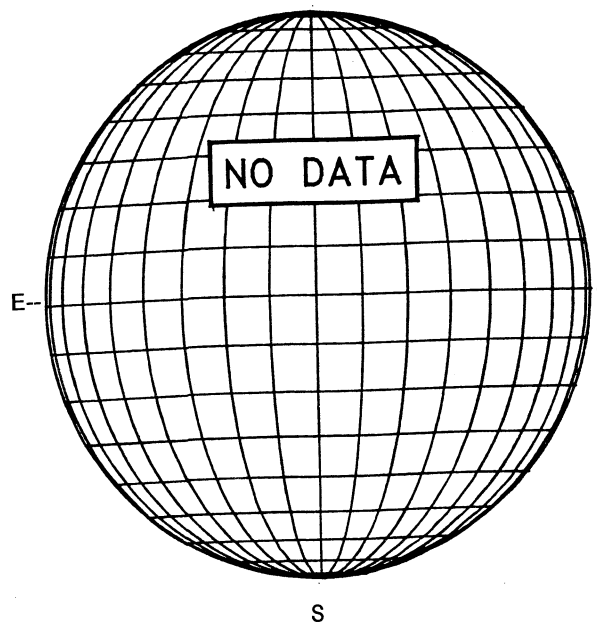

HOLLOMAN SUNSPOT

HOLLOMAN SUNSPOTS
December 19, 2001
15:45 UT Poor
Bp = -1.4
Po = 8.0
Lo = 242.7

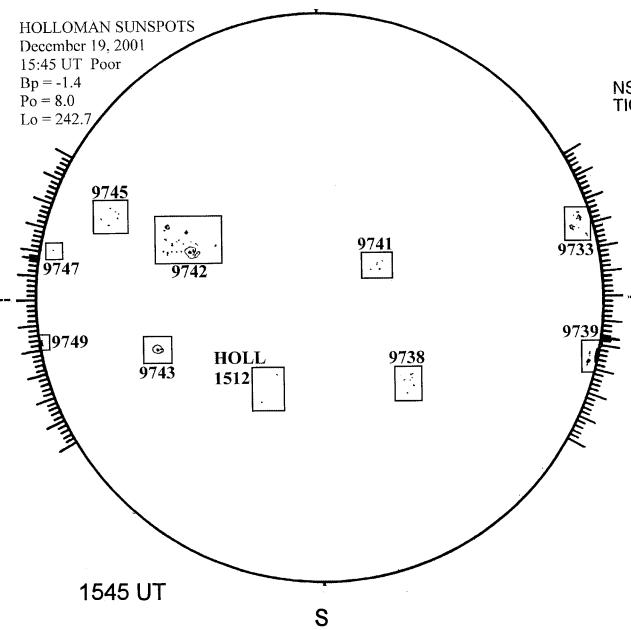

1545 UT

SACRAMENTO PEAK CORONA (1.15 Radii)

NSO / SACRAMENTO PEAK CORONAL DATA
TICK MARKS EVERY 20 MILLIONTHS

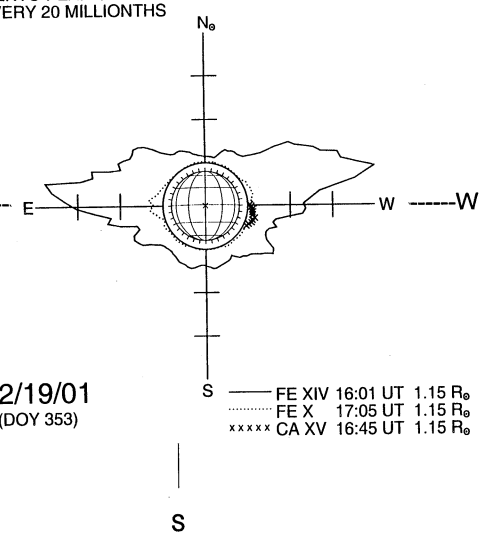

12/19/01
(DOY 353)

FE XIV 16:01 UT 1.15 R⊙
FE X 17:05 UT 1.15 R⊙
CA XV 16:45 UT 1.15 R⊙