DECEMBER 18, 2001 (P= 8.81, Bo = -1.30, Lo = 264.13)

KITT PEAK MAGNETOGRAM

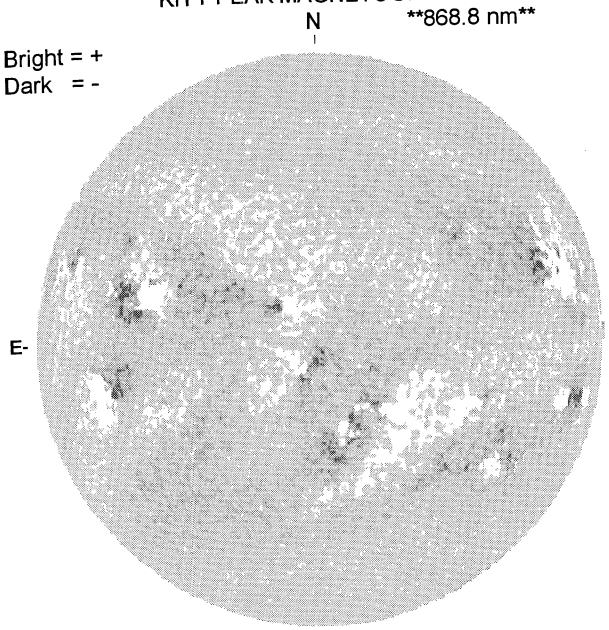

1739 UT

STANFORD MAGNETOGRAM

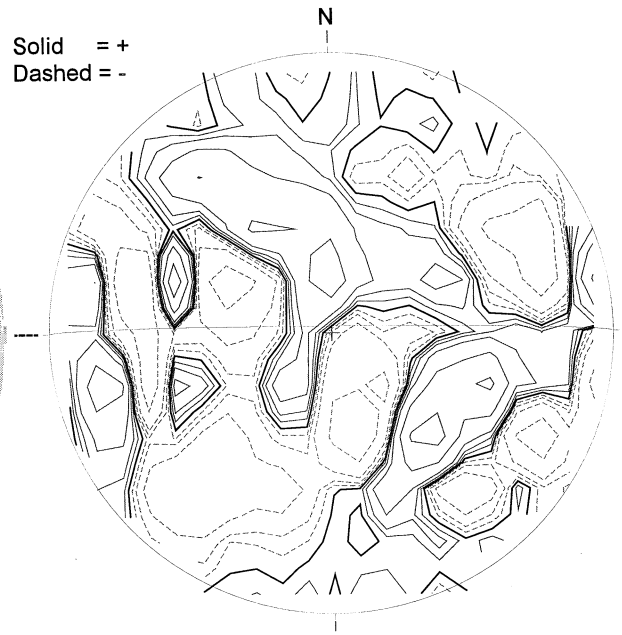

2119 UT

MT. WILSON MAGNETOGRAM

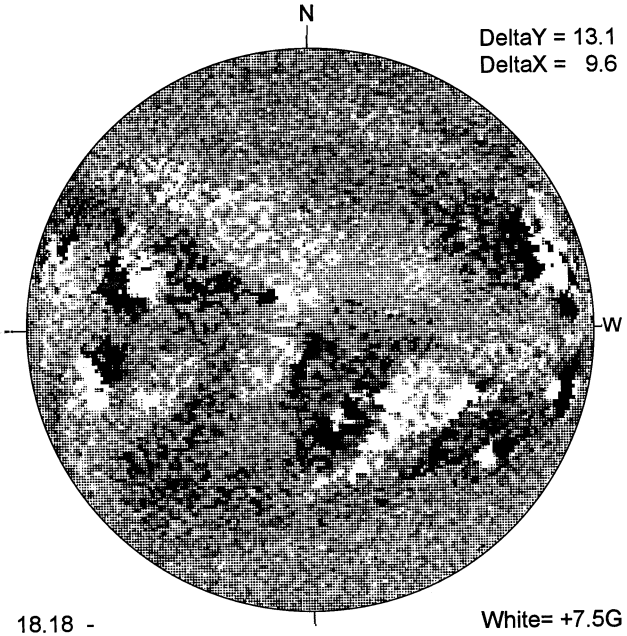

18.18 -
19.15 UT

MEUDON H-ALPHA

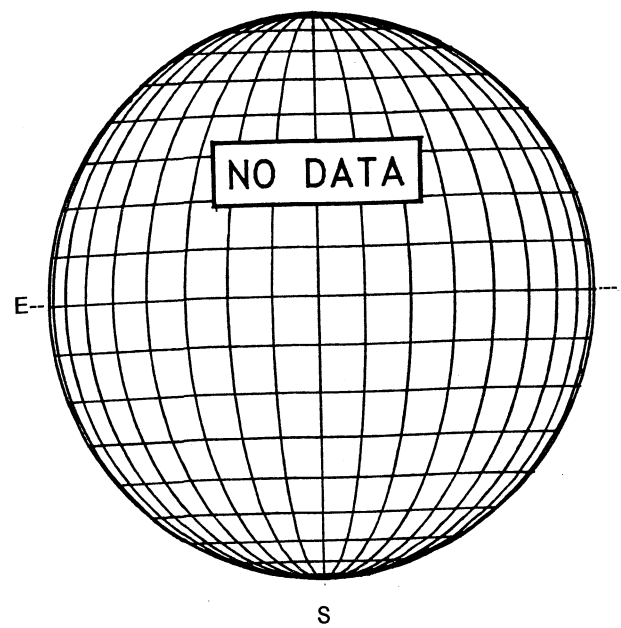

RAMEY SUNSPOT

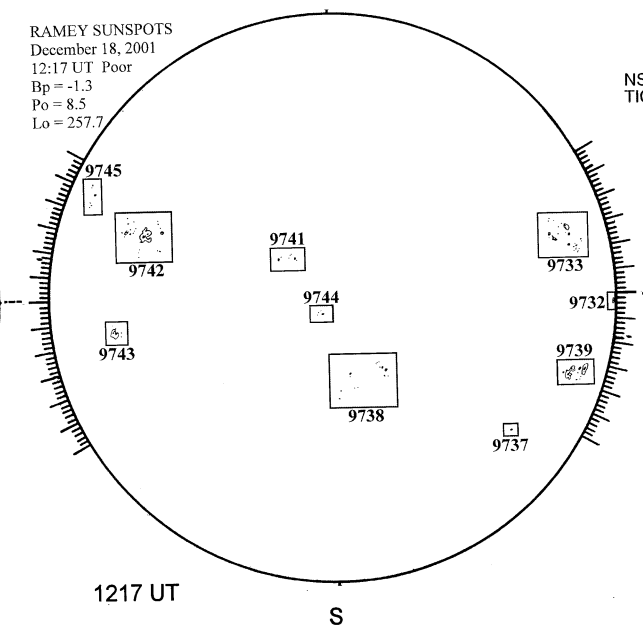

1217 UT

SACRAMENTO PEAK CORONA (1.15 Radii)----

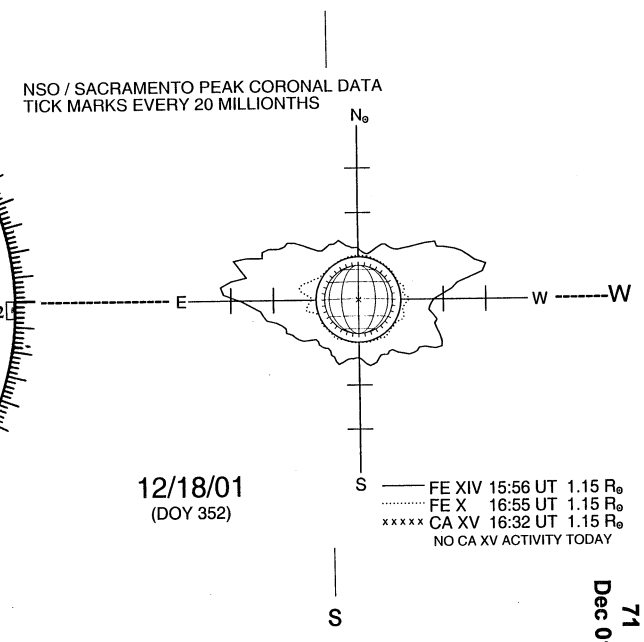

12/18/01
(DOY 352)

71
Dec 01