DECEMBER 17, 2001 (P= 9.27, Bo = -1.17, Lo = 277.30)

KITT PEAK MAGNETOGRAM

868.8 nm

Bright = +
Dark = -

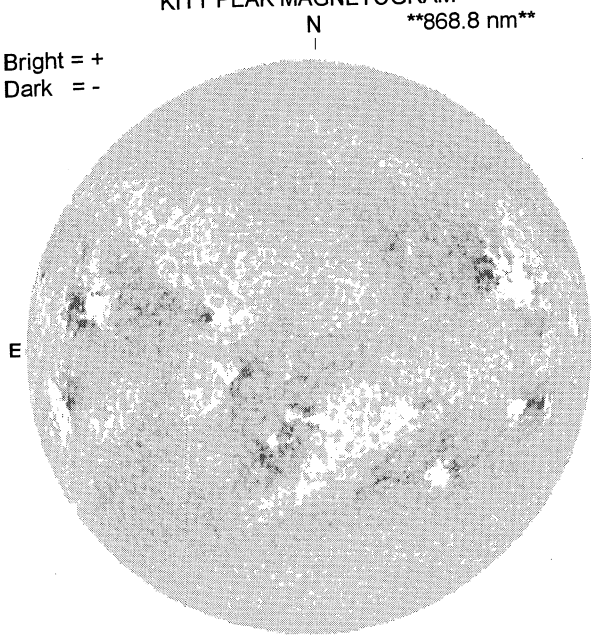

1739 UT

STANFORD MAGNETOGRAM

Solid = +
Dashed = -

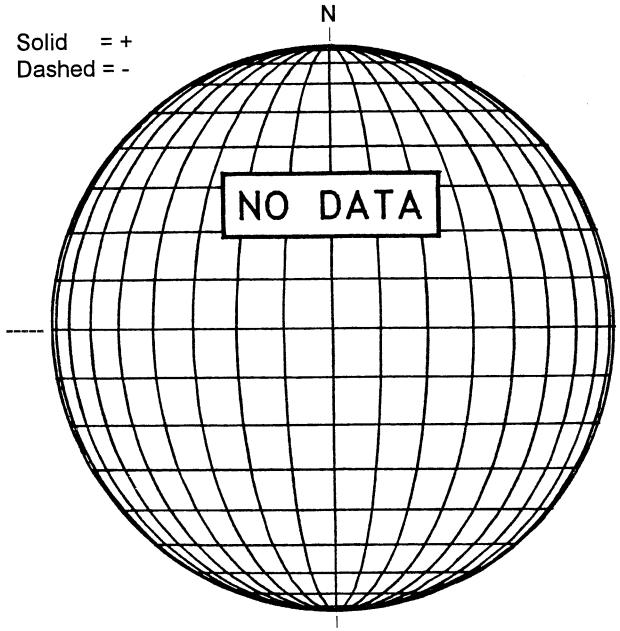

18.93 -
19.91 UT

MT. WILSON MAGNETOGRAM

DeltaY = 13.1
DeltaX = 9.6

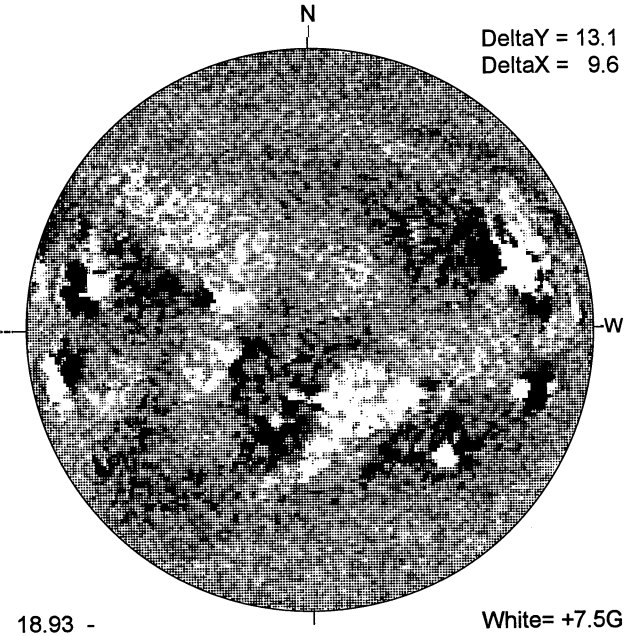

White= +7.5G
Black = -7.5G

MEUDON H-ALPHA

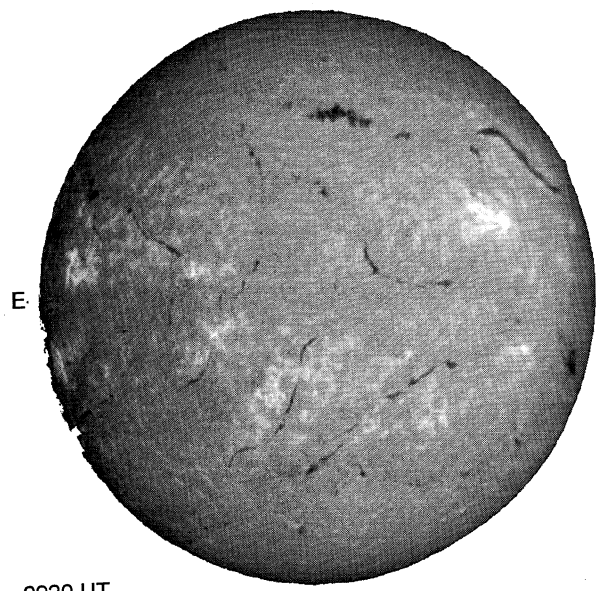

0920 UT

HOLLOMAN SUNSPOT

HOLLOMAN SUNSPOTS
December 17, 2001
16:00 UT Fair
Bp = -1.2
Po = 9.0
Lo = 269.7

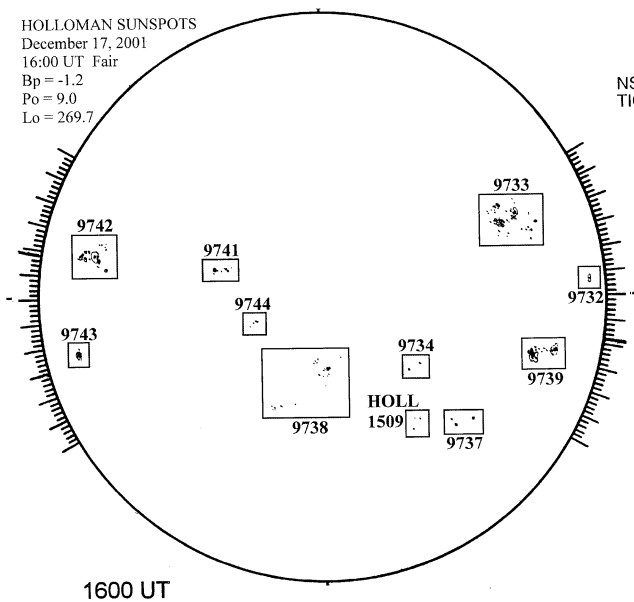

1600 UT

SACRAMENTO PEAK CORONA (1.15 Radii)

NSO / SACRAMENTO PEAK CORONAL DATA
TICK MARKS EVERY 20 MILLIONTHS

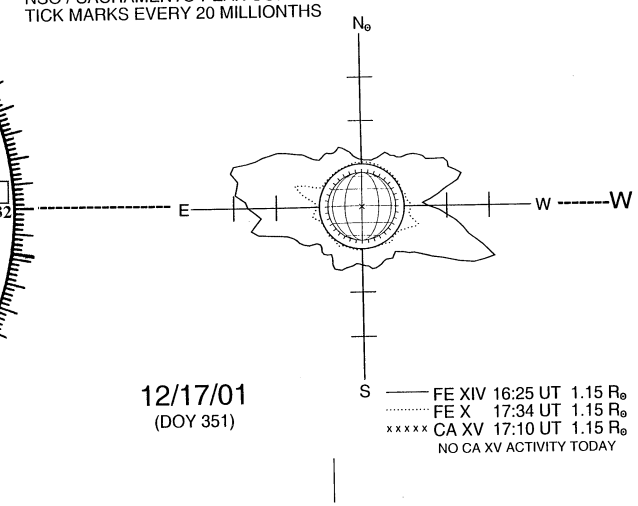

12/17/01
(DOY 351)

FE XIV 16:25 UT 1.15 R⊙
FE X 17:34 UT 1.15 R⊙
xxxxx CA XV 17:10 UT 1.15 R⊙
NO CA XV ACTIVITY TODAY