DECEMBER 10, 2001 (P= 12.40, Bo = -0.28 Lo = 9.53)

KITT PEAK MAGNETOGRAM

868.8 nm

Bright = +
Dark = -

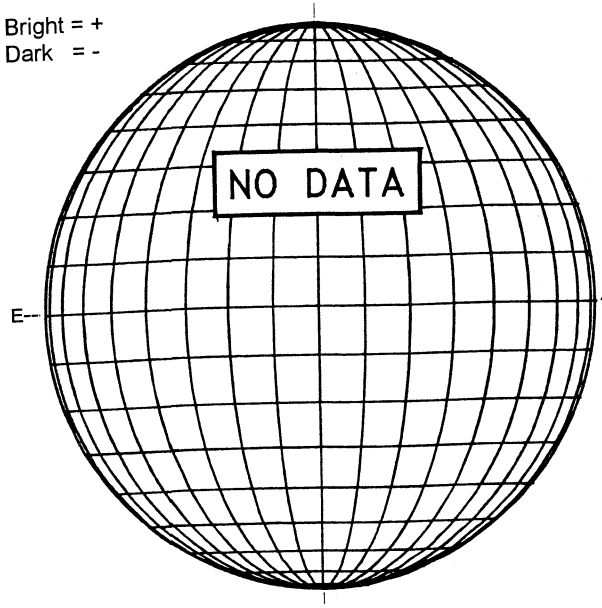

STANFORD MAGNETOGRAM

Solid = +
Dashed = -

1858 UT

MT. WILSON MAGNETOGRAM

DeltaY =
DeltaX =

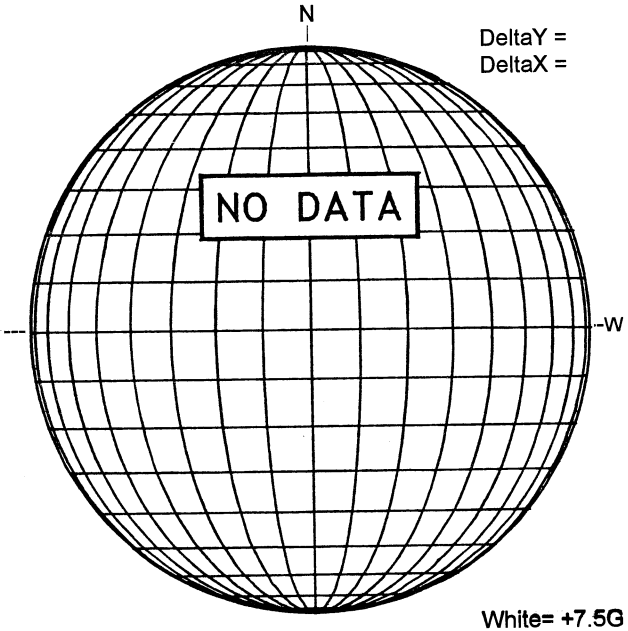

White= +7.5G
Black = -7.5G

MEUDON H-ALPHA

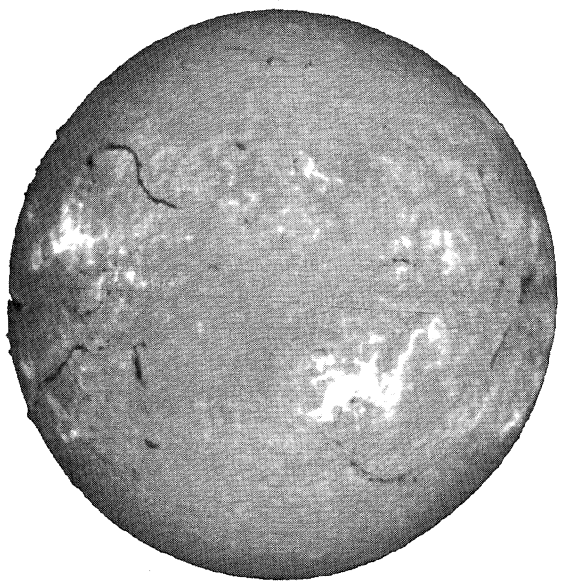

0904 UT

S

RAMEY SUNSPOTS

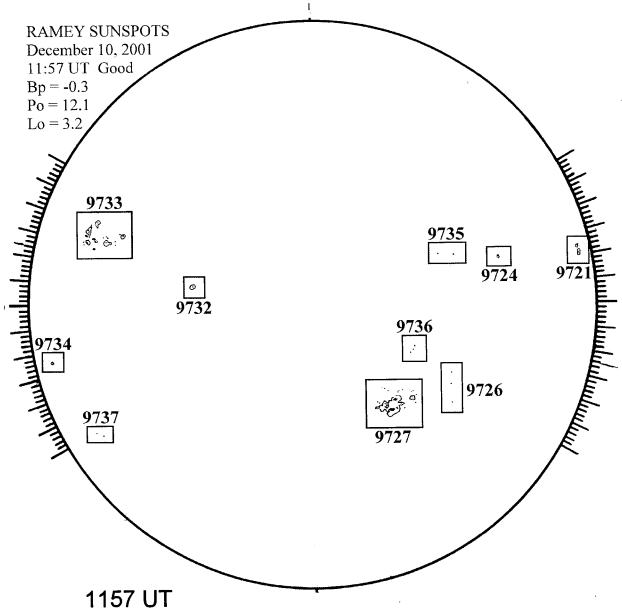

1157 UT

S

SACRAMENTO PEAK CORONA (1.15 Radii)----

NSO / SACRAMENTO PEAK CORONAL DATA
TICK MARKS EVERY 20 MILLIONTHS

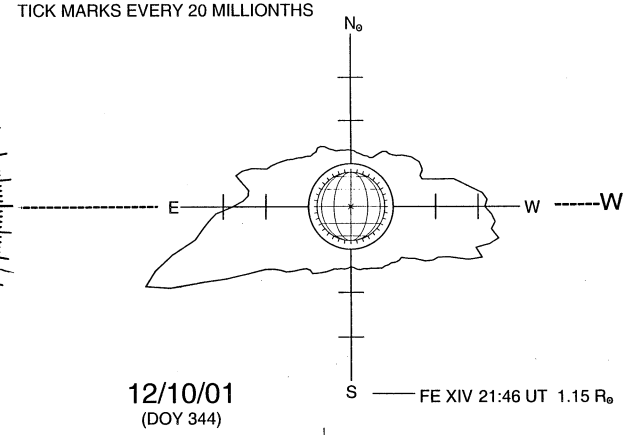

12/10/01
(DOY 344)

FE XIV 21:46 UT 1.15 R⊙

S