DECEMBER 9, 2001 (P= 12.83, Bo = -0.15, Lo = 22.70)

KITT PEAK MAGNETOGRAM

N

**868.8 nm

Bright = +
Dark = -

E

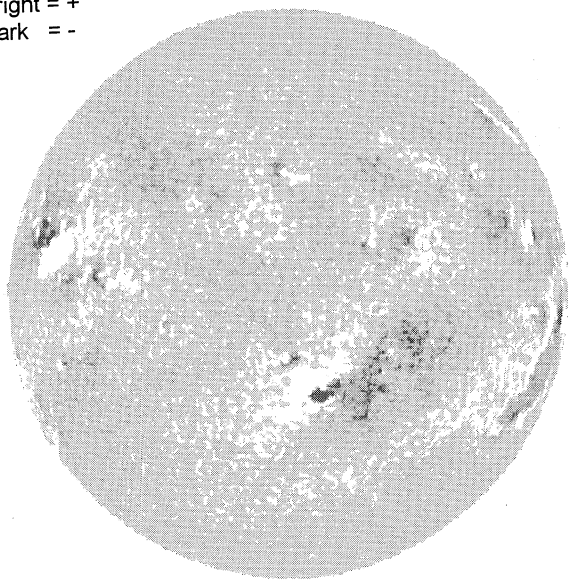

1707 UT

STANFORD MAGNETOGRAM

N

Solid = +
Dashed = -

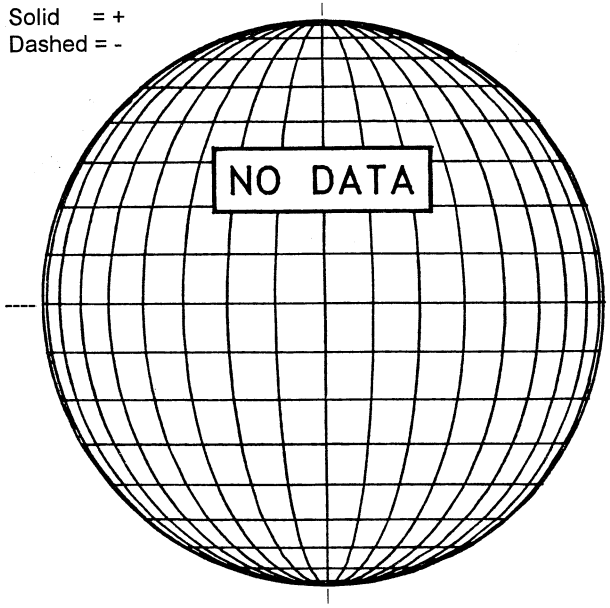

MT. WILSON MAGNETOGRAM

N

DeltaY = 13.1
DeltaX = 9.6

W

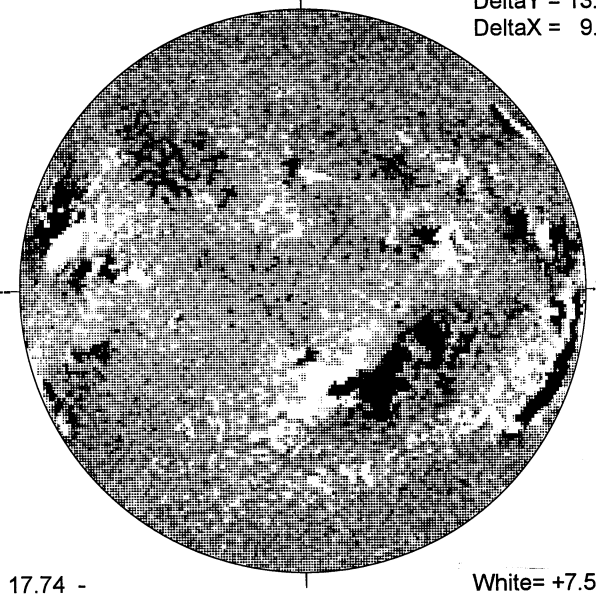

17.74 -
18.71 UT

White= +7.5G
Black = -7.5G

MEUDON H-ALPHA

E

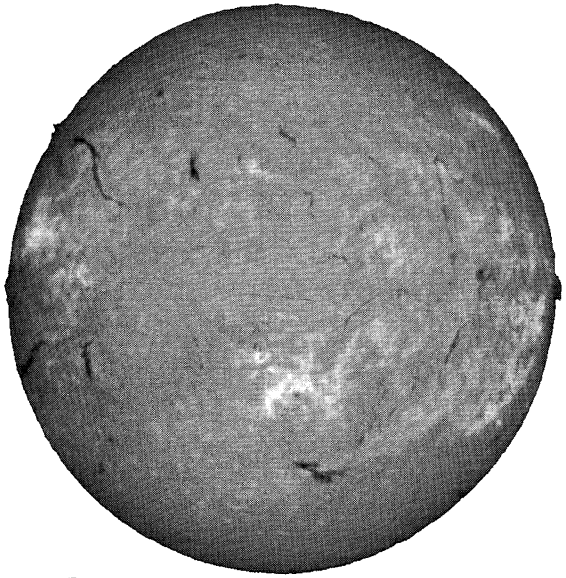

0953 UT

S

RAMEY SUNSPOT

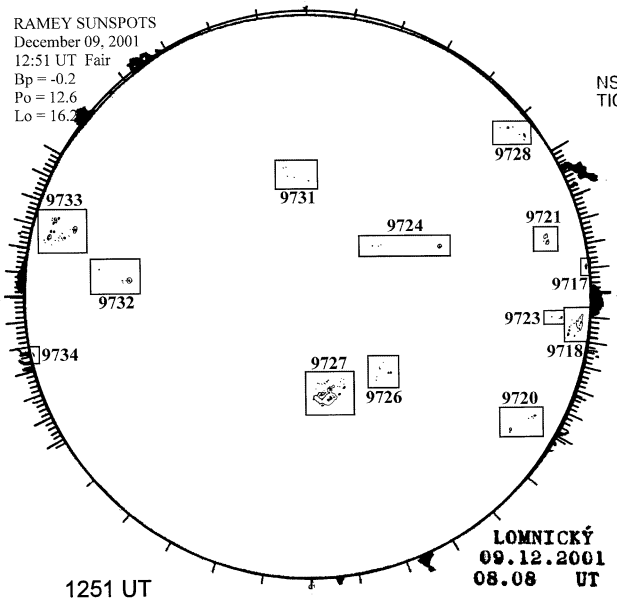

1251 UT
0808 UT LOMN Prom S

SACRAMENTO PEAK CORONA (1.15 Radii)

NSO / SACRAMENTO PEAK CORONAL DATA
TICK MARKS EVERY 20 MILLIONTHS

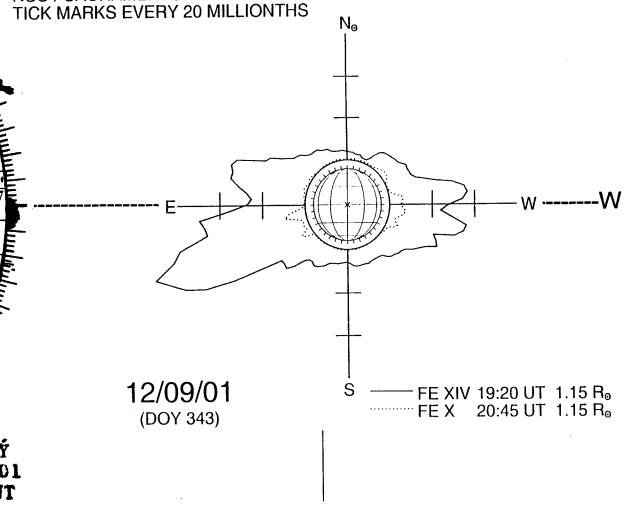

12/09/01
(DOY 343)

S