DECEMBER 8, 2001 (P= 13.26, Bo = -0.02, Lo = 35.88)

KITT PEAK MAGNETOGRAM

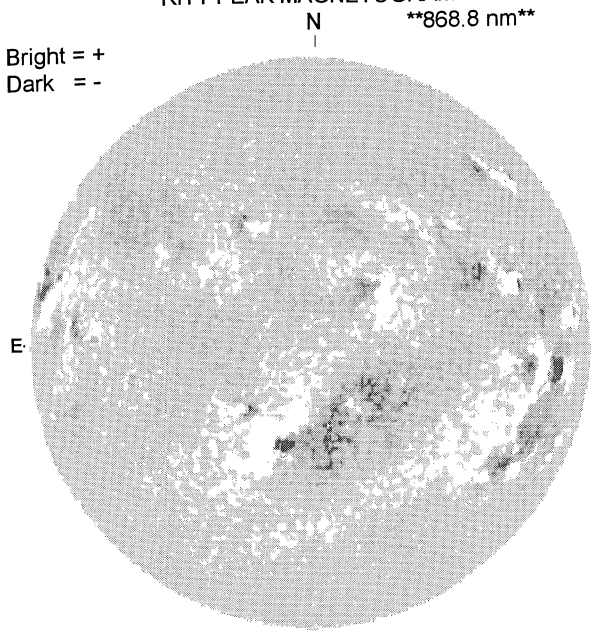

STANFORD MAGNETOGRAM

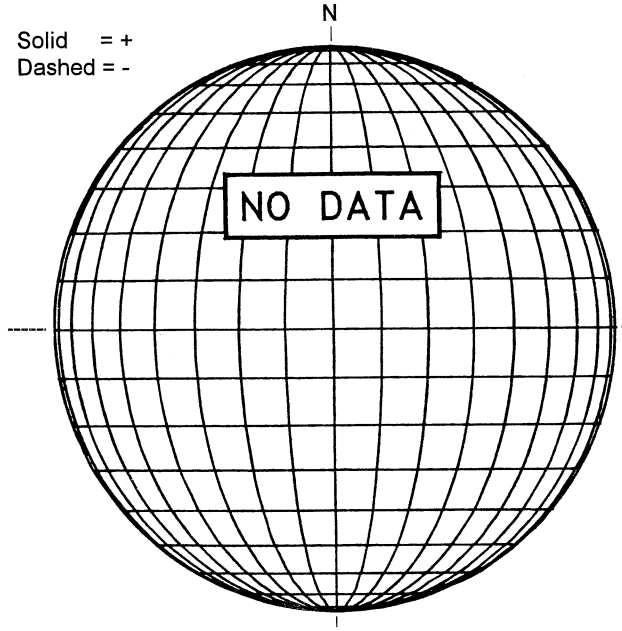

MT. WILSON MAGNETOGRAM

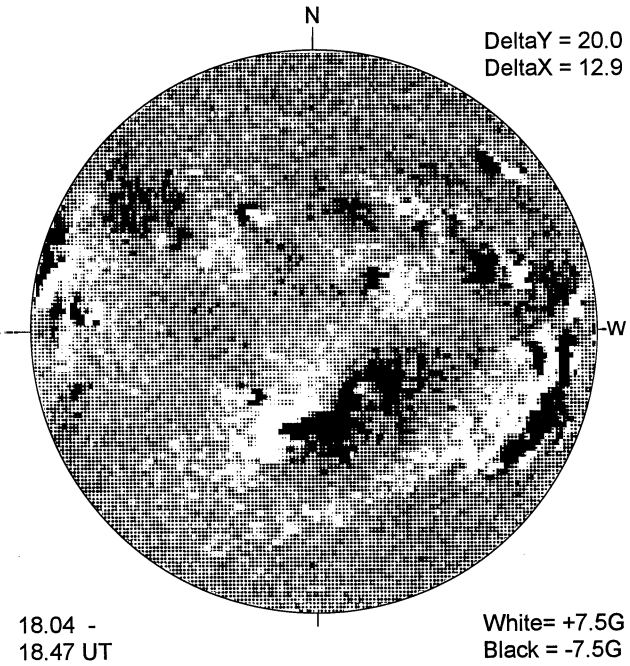

MEUDON H-ALPHA

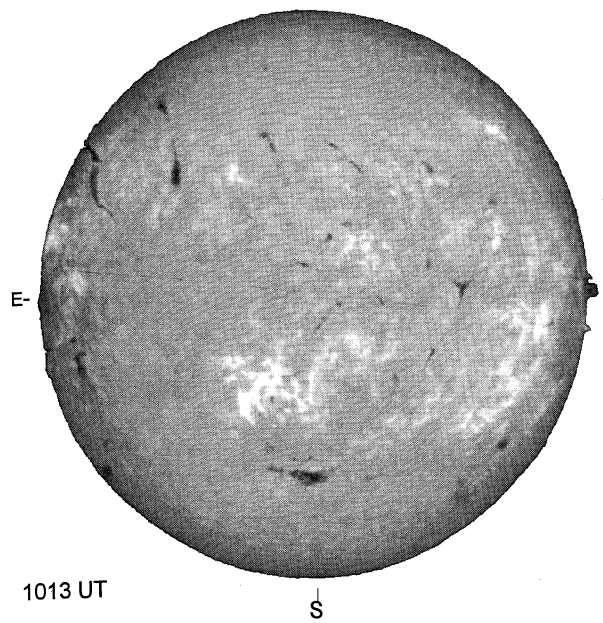

RAMEY SUNSPOT

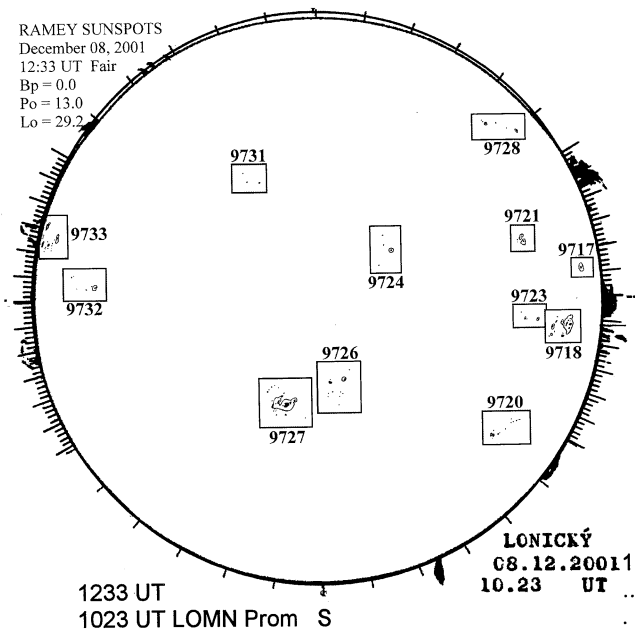
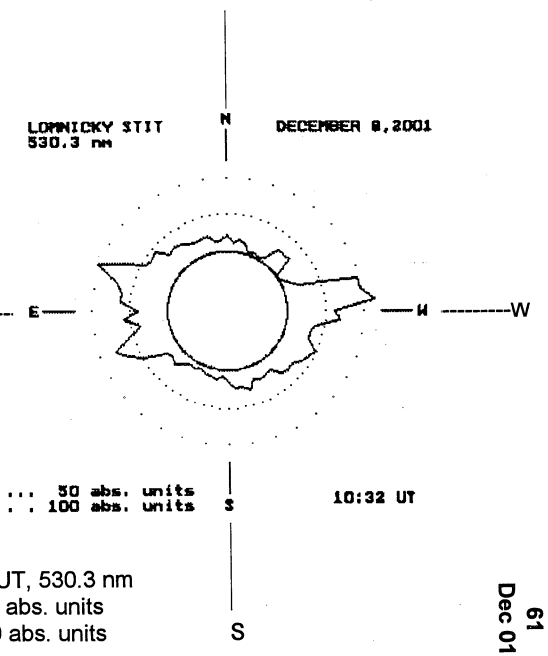
LOMNICKY PEAK CORONA (1.04 Radii)----