DECEMBER 5, 2001 (P= 14.50, Bo = 0.36, Lo = 75.41)

KITT PEAK MAGNETOGRAM

868.8 nm

Bright = +
Dark = -

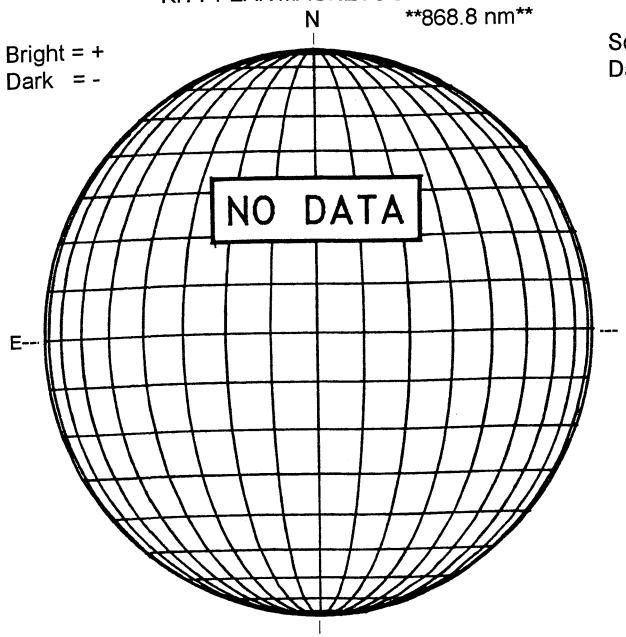

1651 UT

STANFORD MAGNETOGRAM

Solid = +
Dashed = -

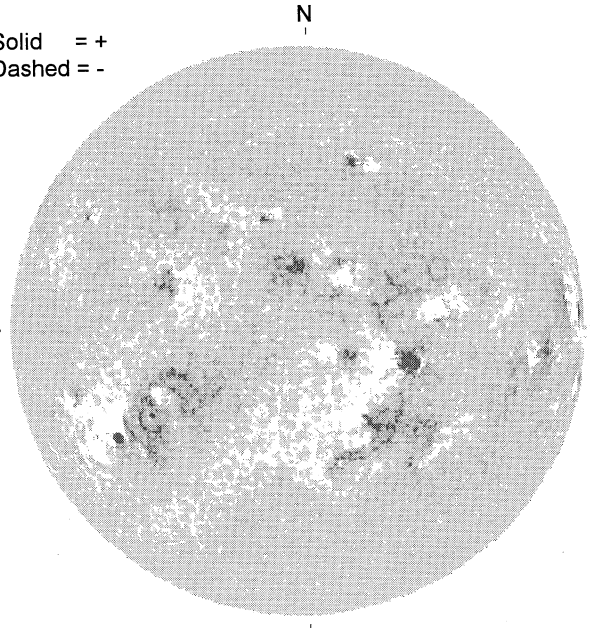

MT. WILSON MAGNETOGRAM

DeltaY = 13.0
DeltaX = 9.6

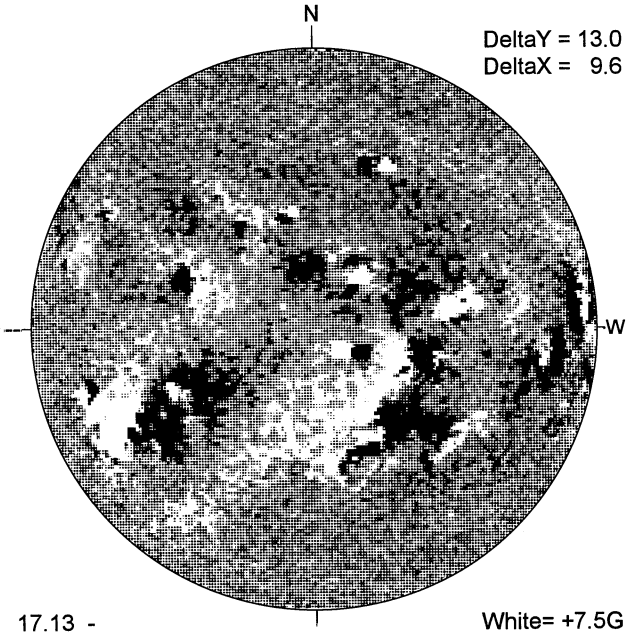

17.13 -
18.11 UT

White= +7.5G
Black = -7.5G

MEUDON H-ALPHA

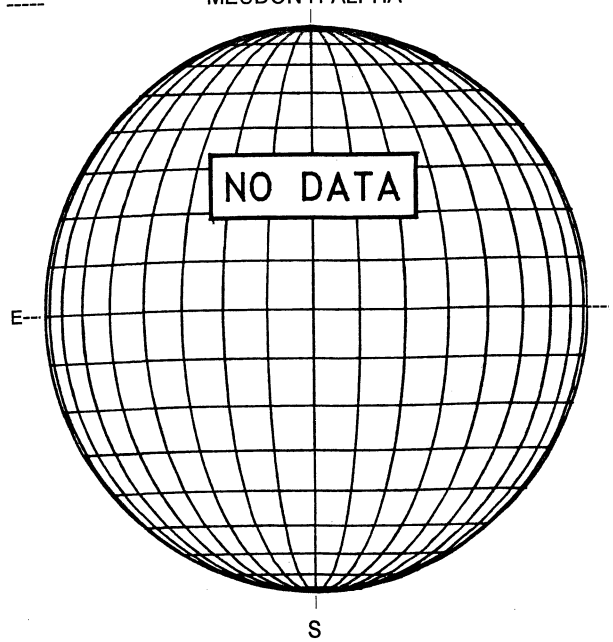

RAMEY SUNSPOT

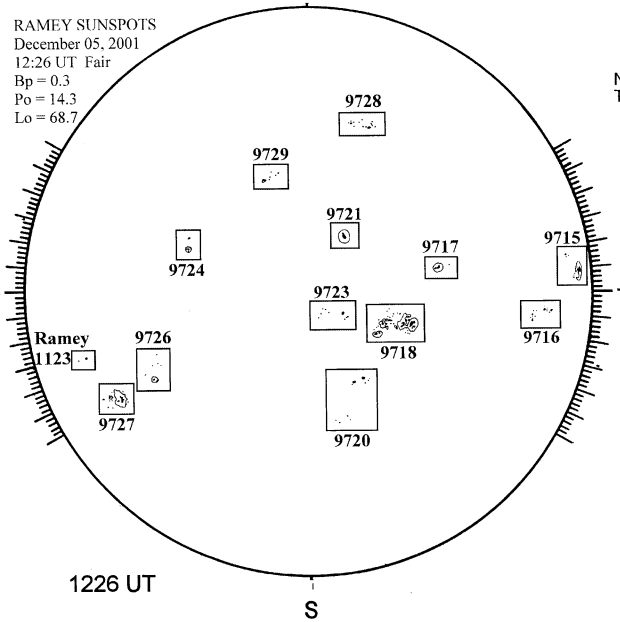

1226 UT

SACRAMENTO PEAK CORONA (1.15 Radii)

NSO / SACRAMENTO PEAK CORONAL DATA
TICK MARKS EVERY 20 MILLIONTHS

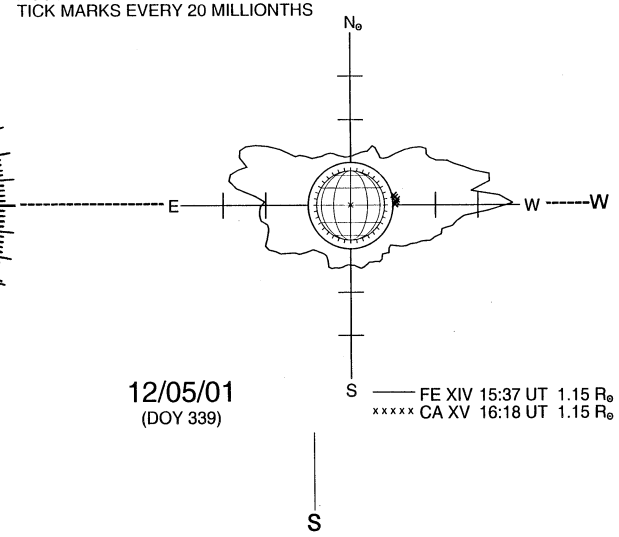

12/05/01
(DOY 339)

—— FE XIV 15:37 UT 1.15 R⊙
xxxxx CA XV 16:18 UT 1.15 R⊙