DECEMBER 4, 2001 (P= 14.91, Bo = 0.49, Lo = 88.59)

KITT PEAK MAGNETOGRAM

868.8 nm

Bright = +
Dark = -

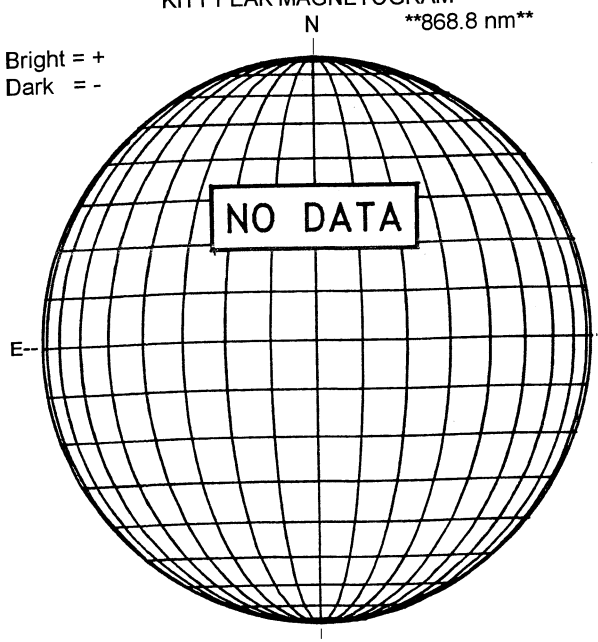

STANFORD MAGNETOGRAM

Solid = +
Dashed = -

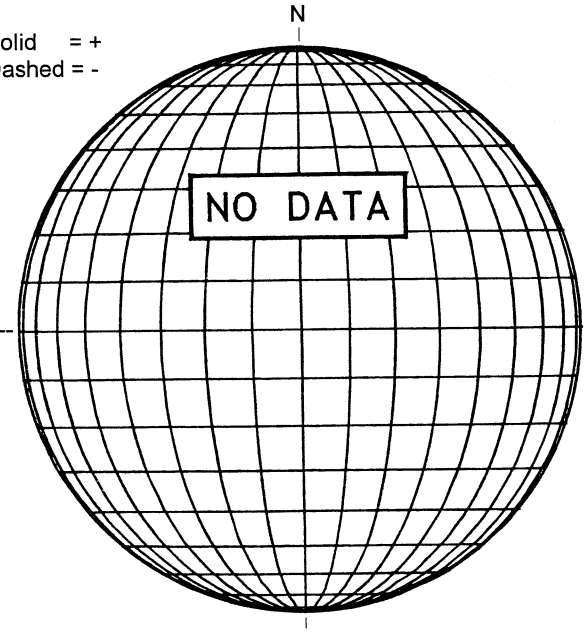

MT. WILSON MAGNETOGRAM

DeltaY = 13.0
DeltaX = 9.6

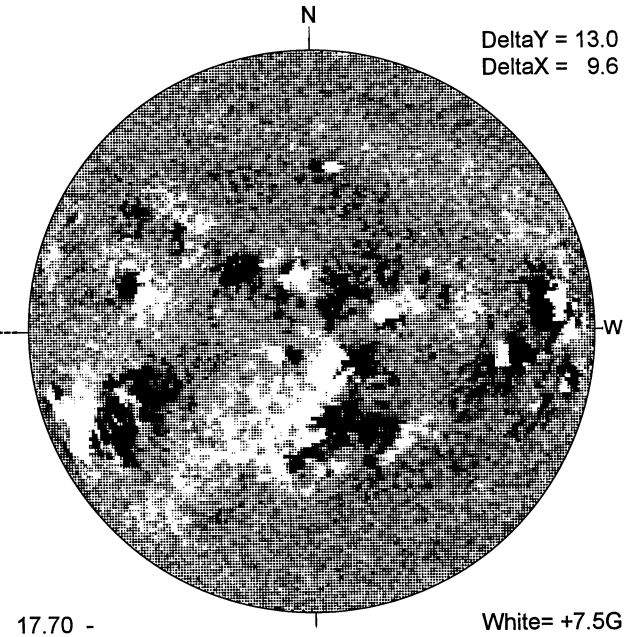

17.70 -
18.67 UT

White= +7.5G
Black = -7.5G

MEUDON H-ALPHA

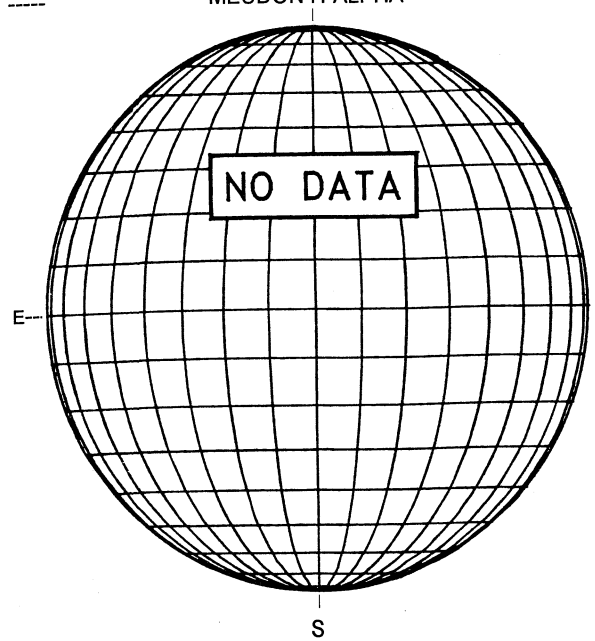

RAMEY SUNSPOT

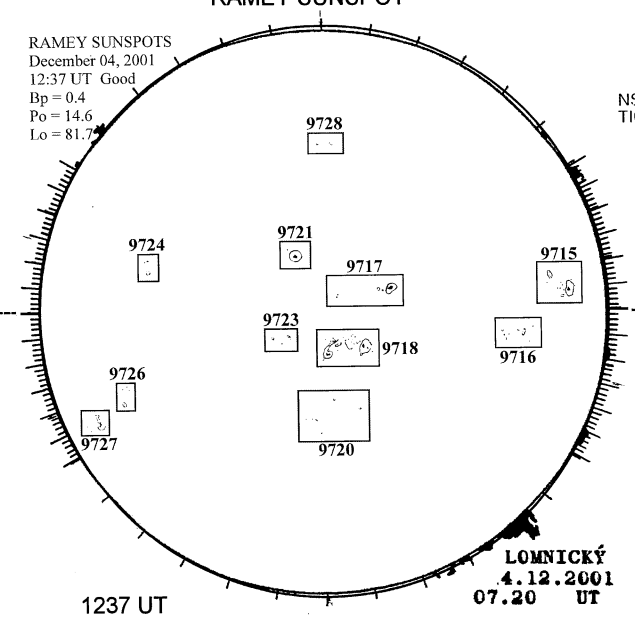

1237 UT
0720 UT LOMN Prom S

SACRAMENTO PEAK CORONA (1.15 Radii)----

NSO / SACRAMENTO PEAK CORONAL DATA
TICK MARKS EVERY 20 MILLIONTHS

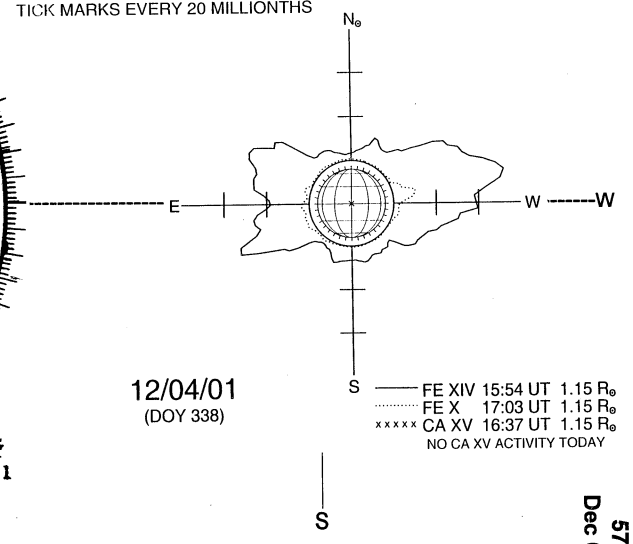

12/04/01
(DOY 338)

FE XIV 15:54 UT 1.15 R⊙
FE X 17:03 UT 1.15 R⊙
CA XV 16:37 UT 1.15 R⊙
NO CA XV ACTIVITY TODAY