DECEMBER 3, 2001 (P= 15.31, Bo = 0.62, Lo = 101.77)

KITT PEAK MAGNETOGRAM

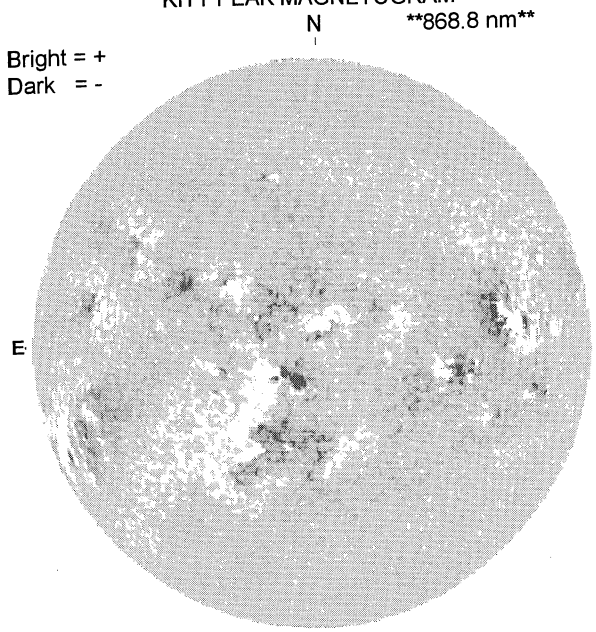

1552 UT

STANFORD MAGNETOGRAM

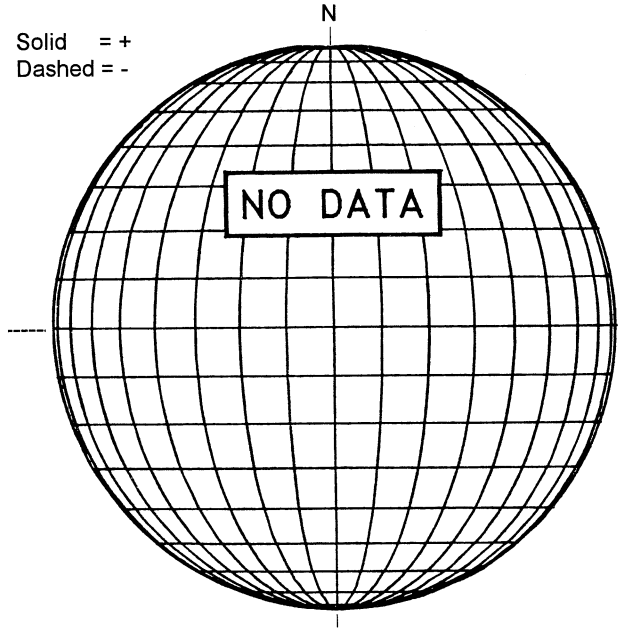

MT. WILSON MAGNETOGRAM

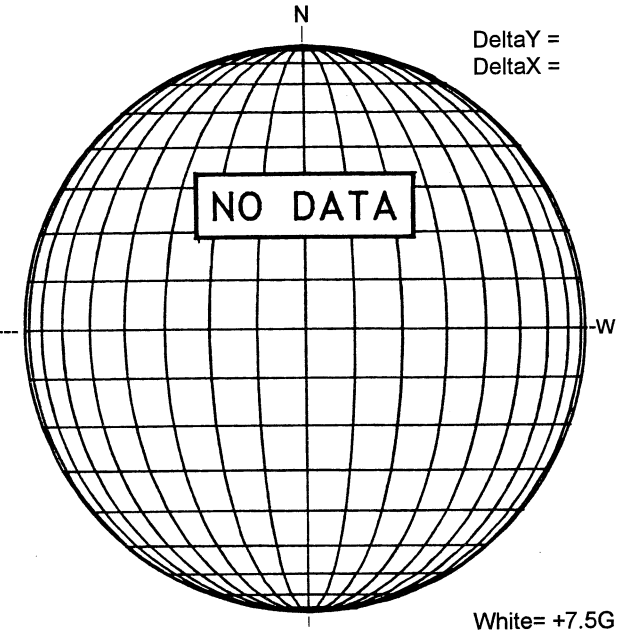

White= +7.5G
Black = -7.5G

MEUDON H-ALPHA

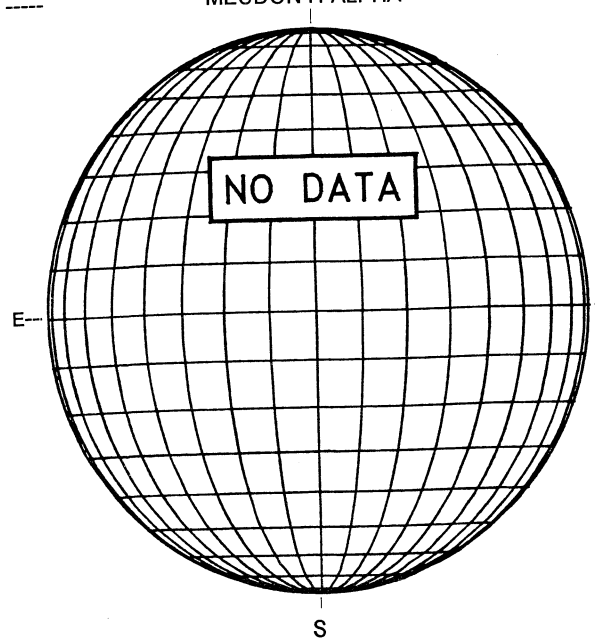

RAMEY SUNSPOT

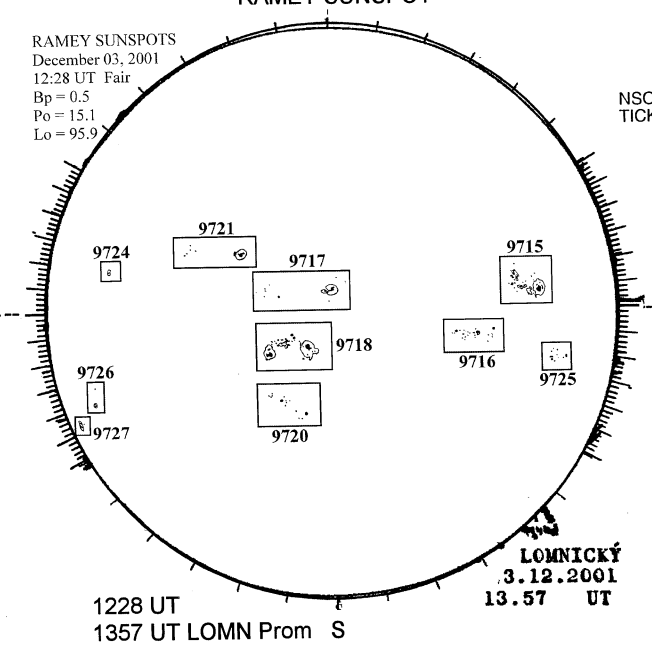

1228 UT
1357 UT LOMN Prom

SACRAMENTO PEAK CORONA (1.15 Radii)----

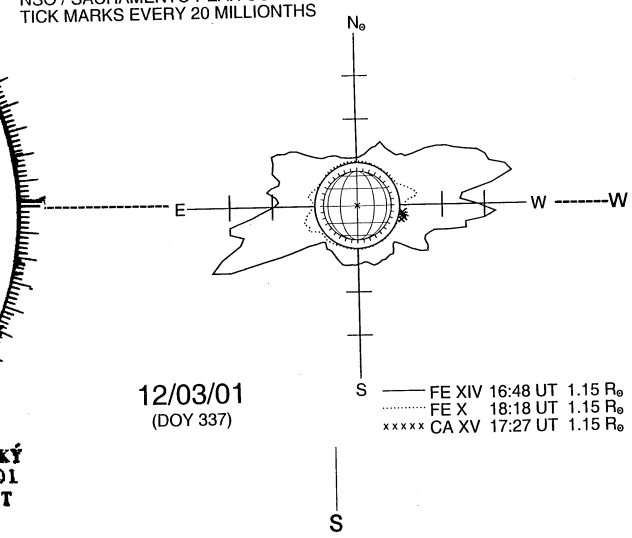

12/03/01
(DOY 337)