DECEMBER 2, 2001 (P= 15.70, Bo = 0.75, Lo = 114.95)

KITT PEAK MAGNETOGRAM

868.8 nm

Bright = +
Dark = -

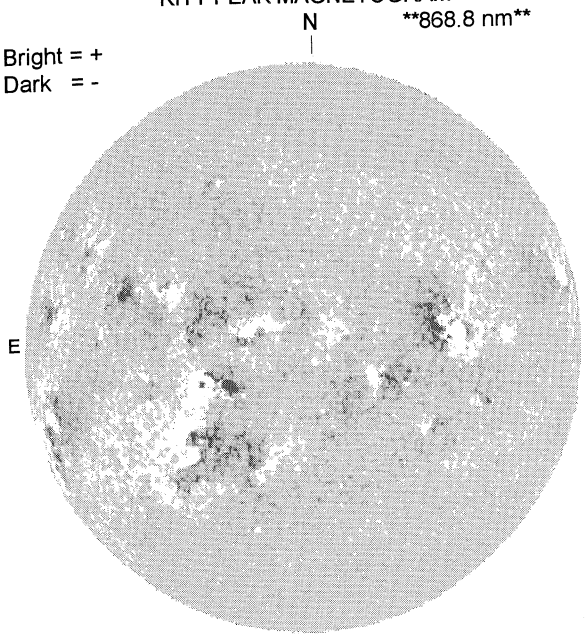

1546 UT

STANFORD MAGNETOGRAM

Solid = +
Dashed = -

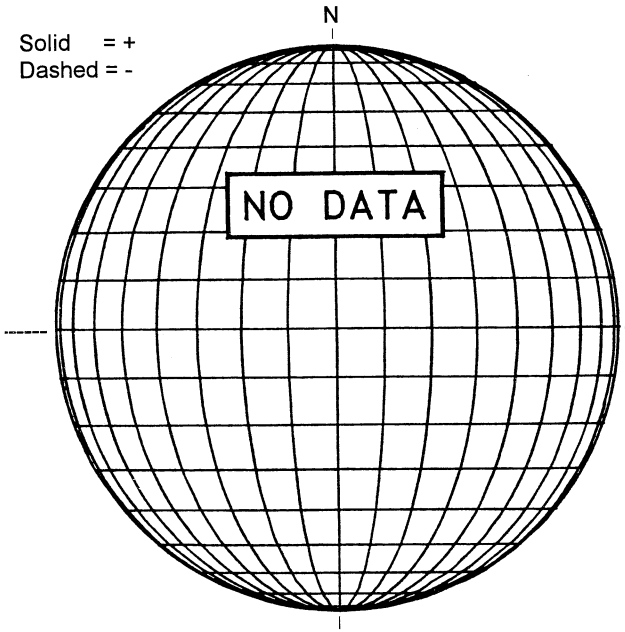

MT. WILSON MAGNETOGRAM

DeltaY =
DeltaX =

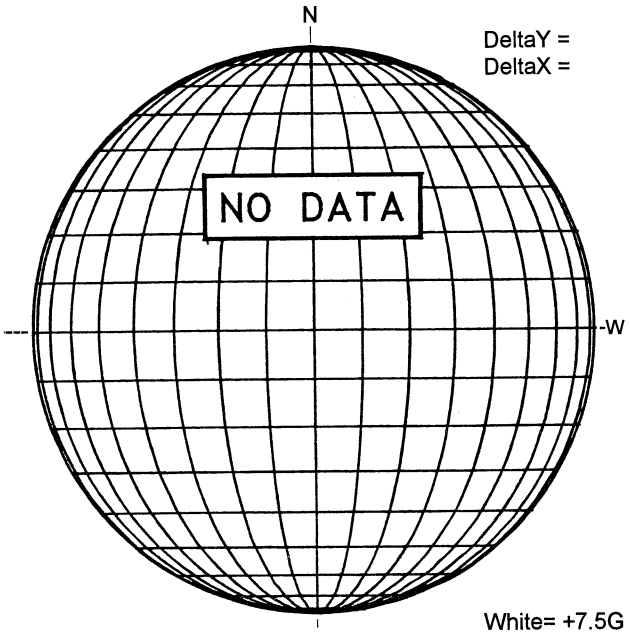

White= +7.5G
Black = -7.5G

MEUDON H-ALPHA

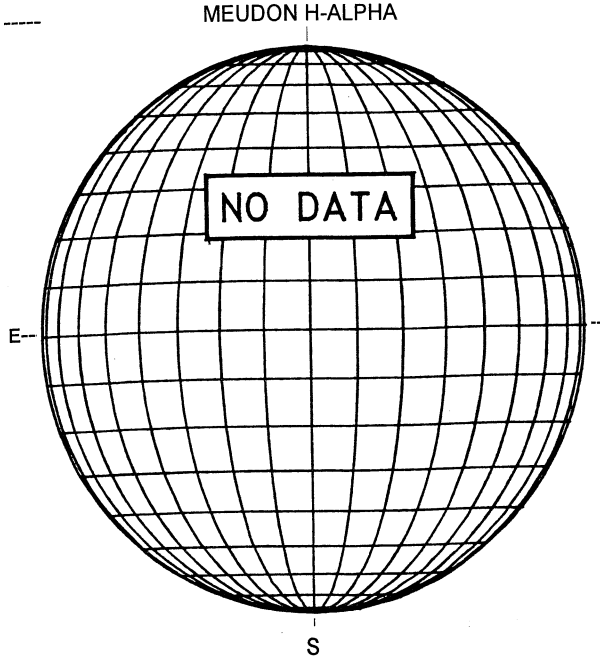

RAMEY SUNSPOT

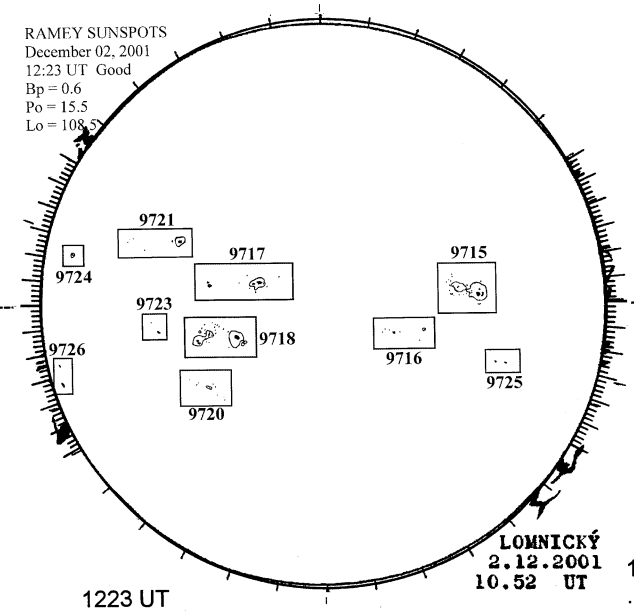

1223 UT
1052 UT LOMN Prom

LOMNICKY PEAK CORONA (1.04 Radii)----

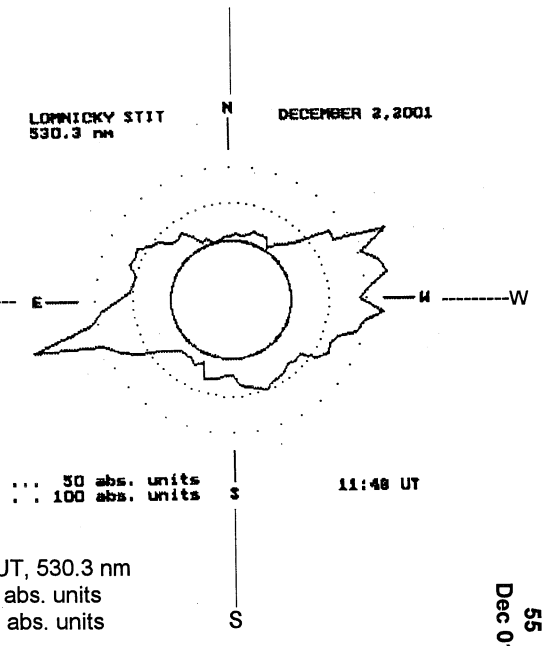

1148 UT, 530.3 nm
.... 50 abs. units
. . 100 abs. units