NOVEMBER 21, 2001 (P= 19.61, Bo = 2.12, Lo = 259.93)

KITT PEAK MAGNETOGRAM

Bright = +
Dark = -

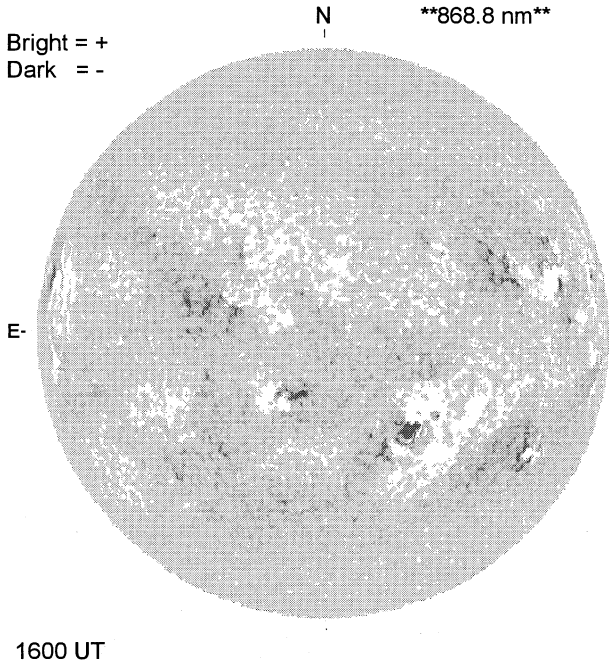

1600 UT

STANFORD MAGNETOGRAM

Solid = +
Dashed = -

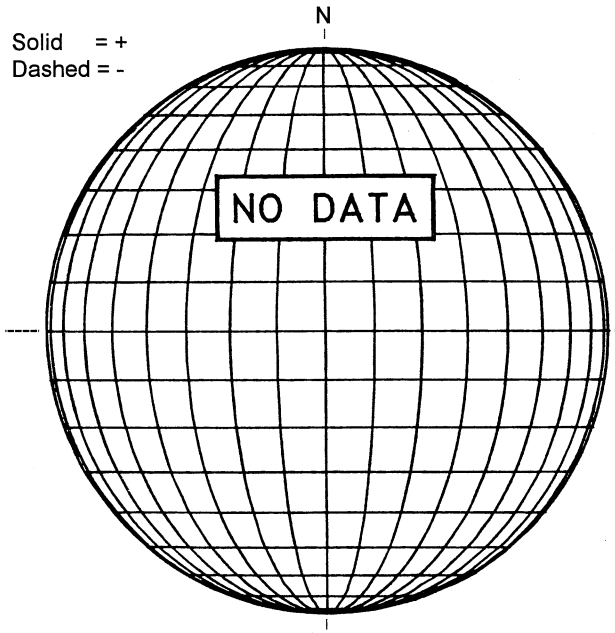

MT. WILSON MAGNETOGRAM

DeltaY =
DeltaX =

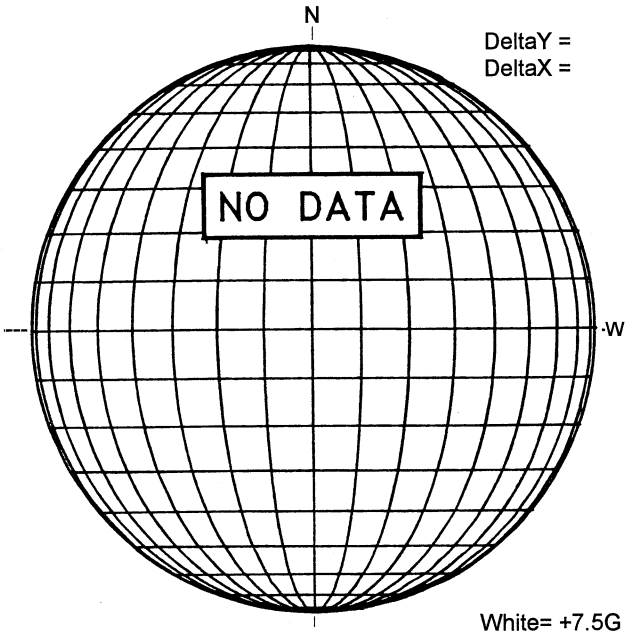

White= +7.5G
Black = -7.5G

MEUDON H-ALPHA

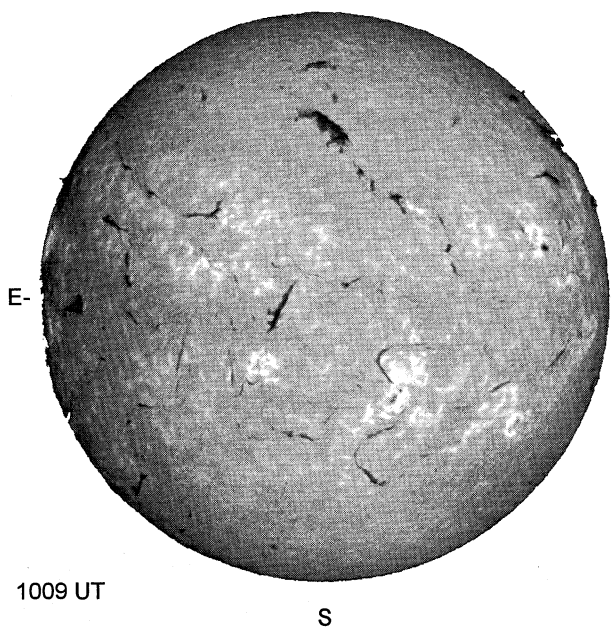

1009 UT

RAMEY SUNSPOT

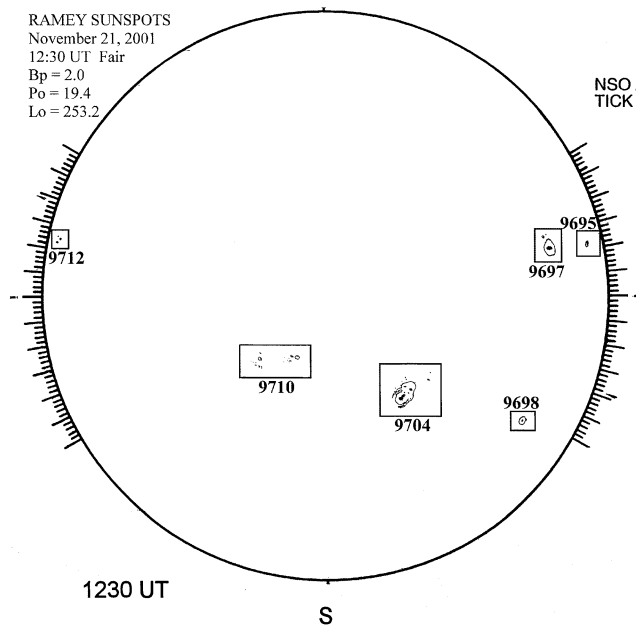

1230 UT

SACRAMENTO PEAK CORONA (1.15 Radii)

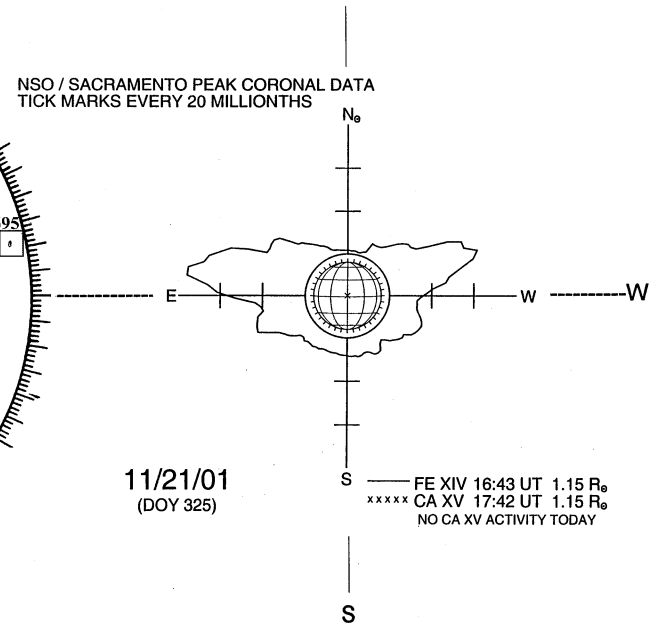

11/21/01
(DOY 325)