NOVEMBER 6, 2001 (P= 23.57, Bo = 3.85, Lo = 97.68)

KITT PEAK MAGNETOGRAM

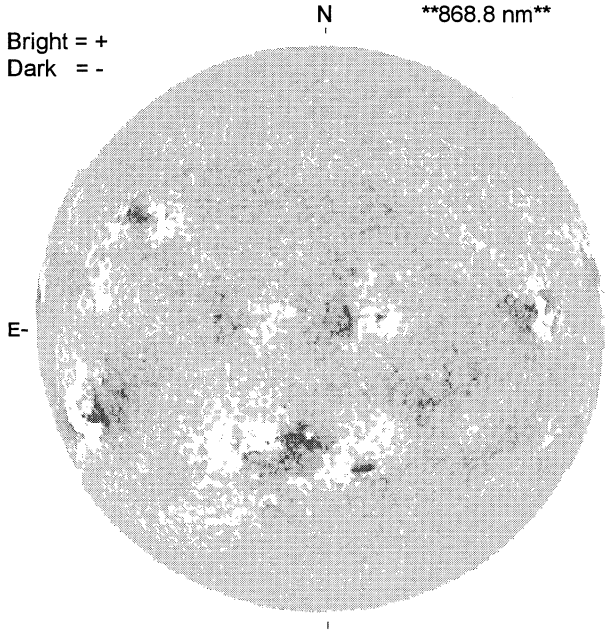

STANFORD MAGNETOGRAM

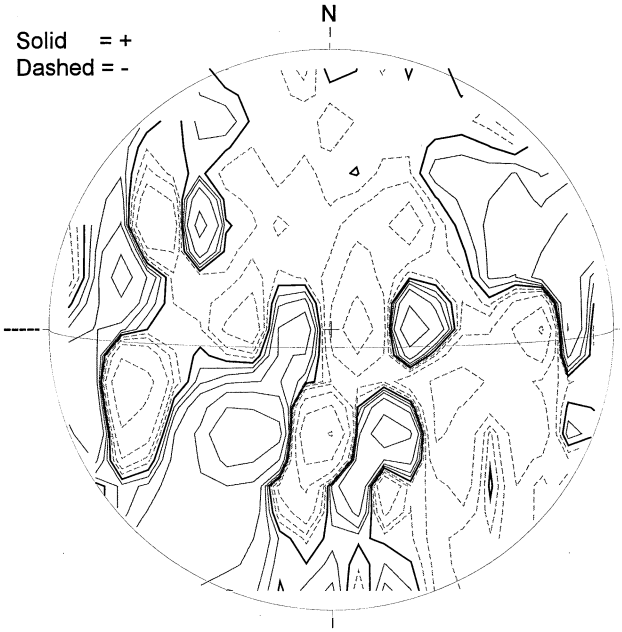

MT. WILSON MAGNETOGRAM

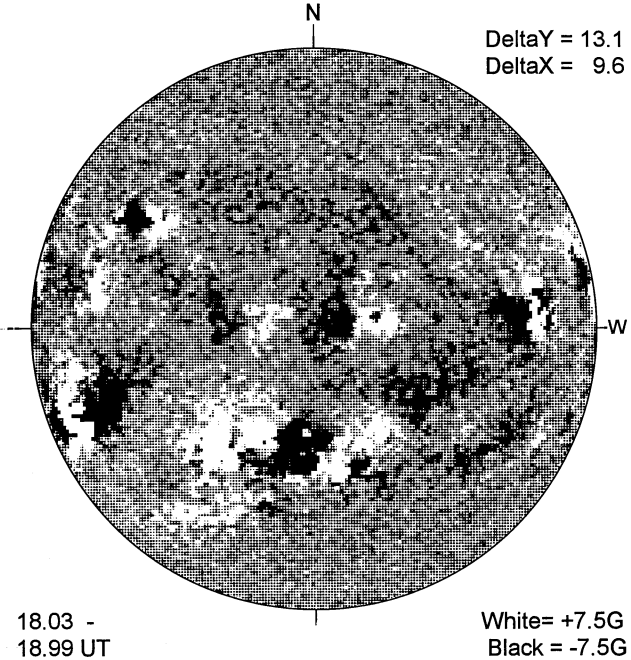

MEUDON H-ALPHA

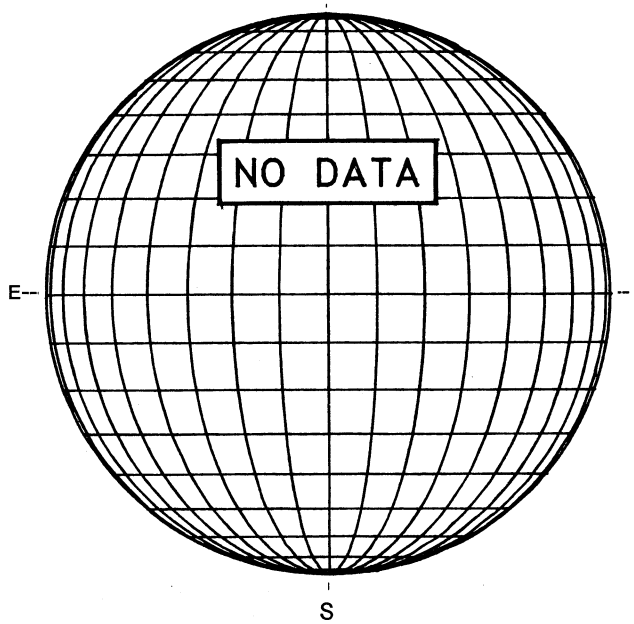

RAMEY SUNSPOT

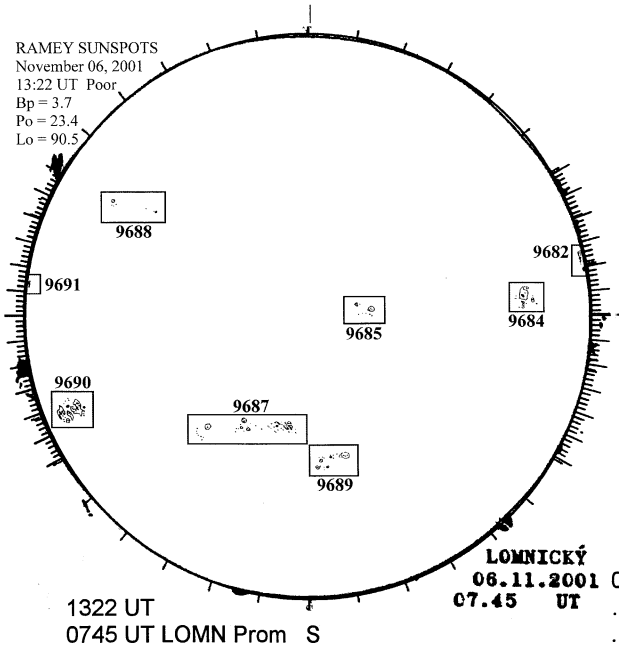

LOMNICKY PEAK CORONA (1.04 Radii)----

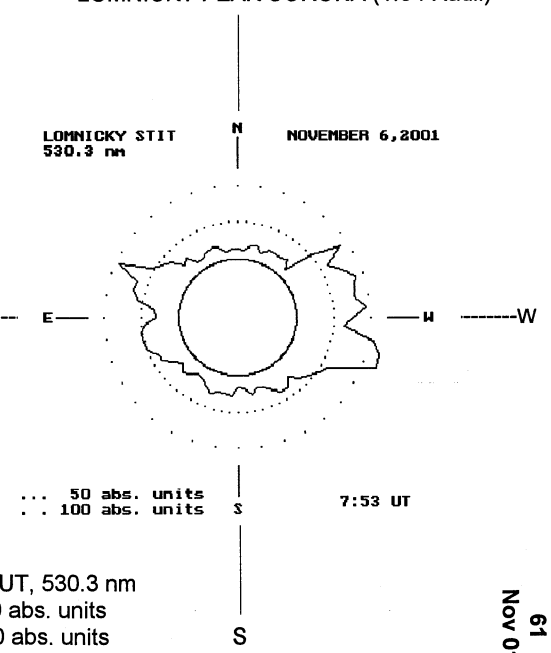

61
Nov 01