NOVEMBER 4, 2001 (P= 23.96, Bo = 4.06, Lo = 124.05)

KITT PEAK MAGNETOGRAM

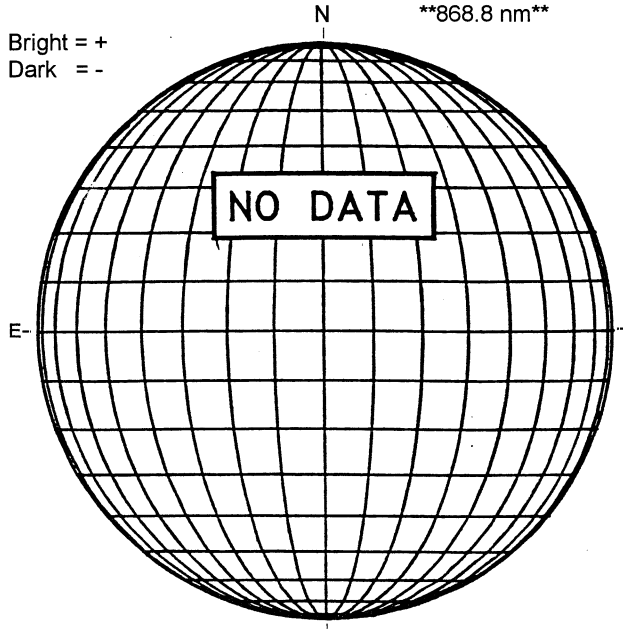

STANFORD MAGNETOGRAM

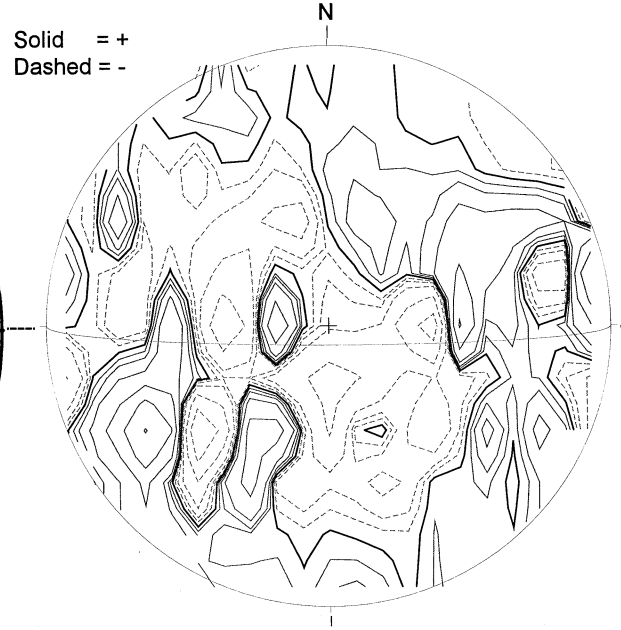

2211 UT

MT. WILSON MAGNETOGRAM

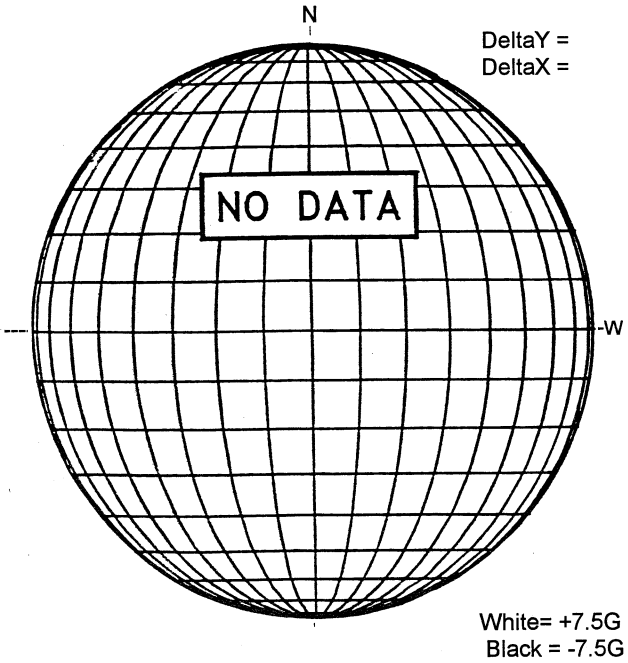

MEUDON H-ALPHA

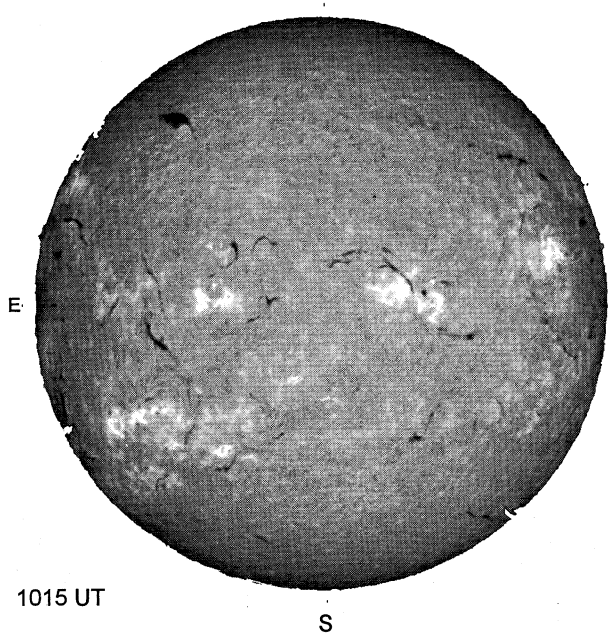

1015 UT

RAMEY SUNSPOT

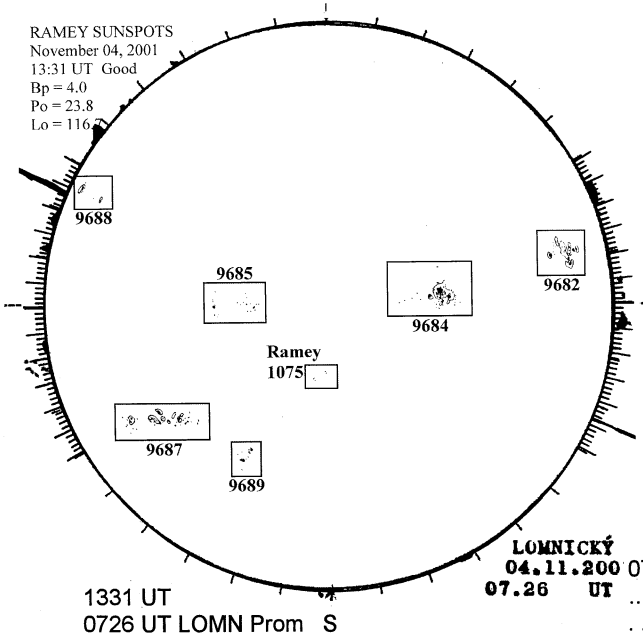

1331 UT
0726 UT LOMN Prom

LOMNICKY PEAK CORONA (1.04 Radii)----

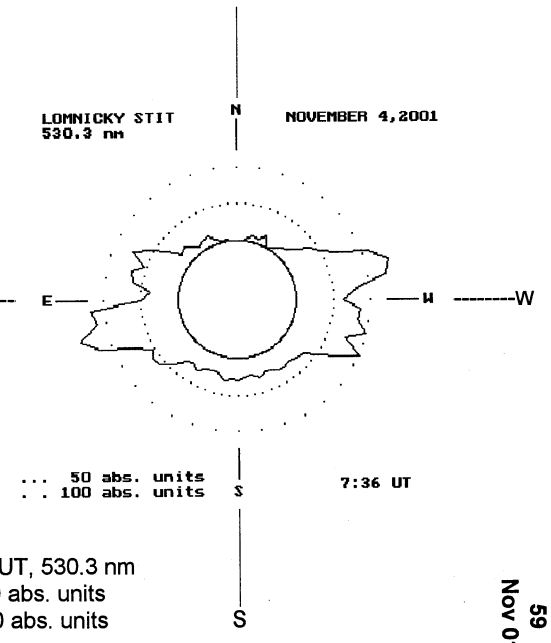

0736 UT, 530.3 nm
.... 50 abs. units
. . 100 abs. units