NOVEMBER 1, 2001 (P= 24.50, Bo = 4.37, Lo = 163.61)

KITT PEAK MAGNETOGRAM

N

868.8 nm

Bright = +
Dark = -

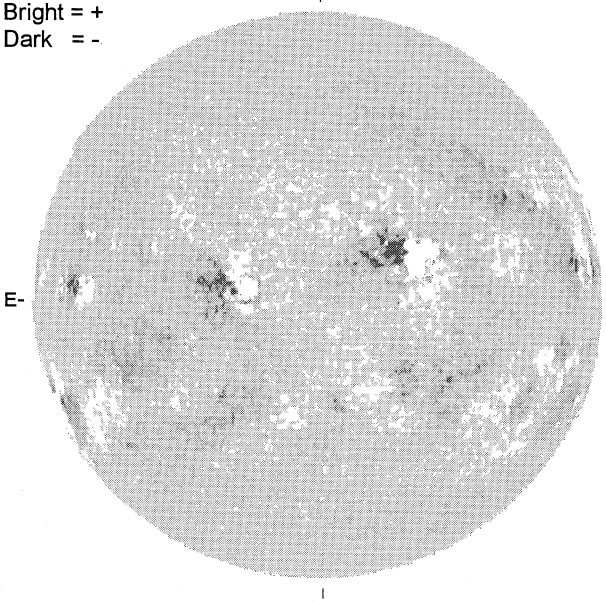

E-

1650 UT

STANFORD MAGNETOGRAM

N

Solid = +
Dashed = -

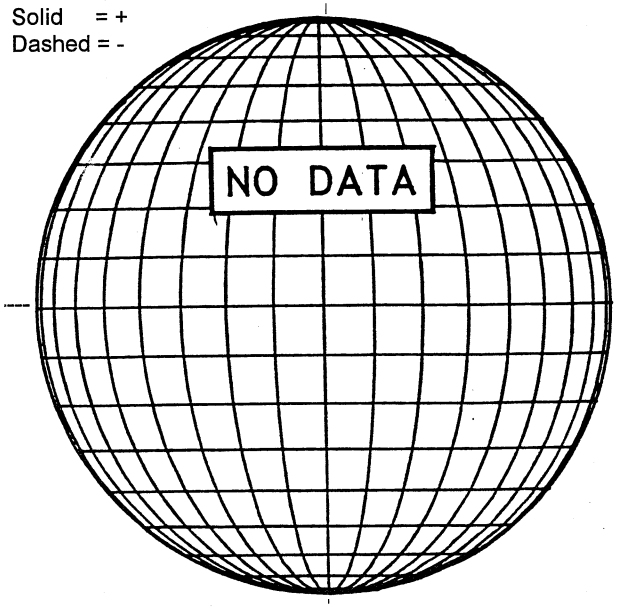

MT. WILSON MAGNETOGRAM

N

DeltaY = 13.1
DeltaX = 9.6

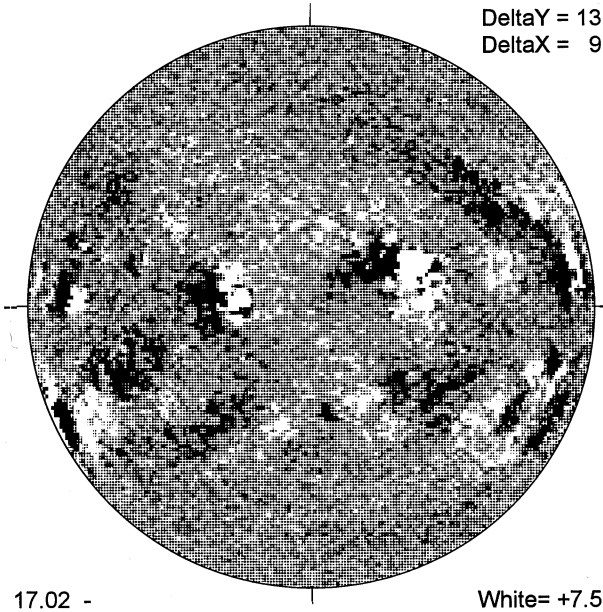

W

17.02 -
17.98 UT

White= +7.5G
Black = -7.5G

MEUDON H-ALPHA

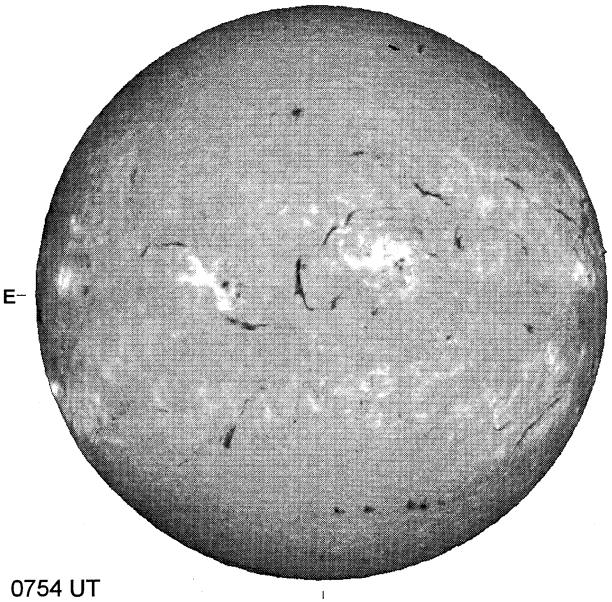

E-

0754 UT

S

RAMEY SUNSPOT

RAMEY SUNSPOTS
November 01, 2001
12:35 UT Very Poor
Bp = 4.3
Po = 24.4
Lo = 157.0

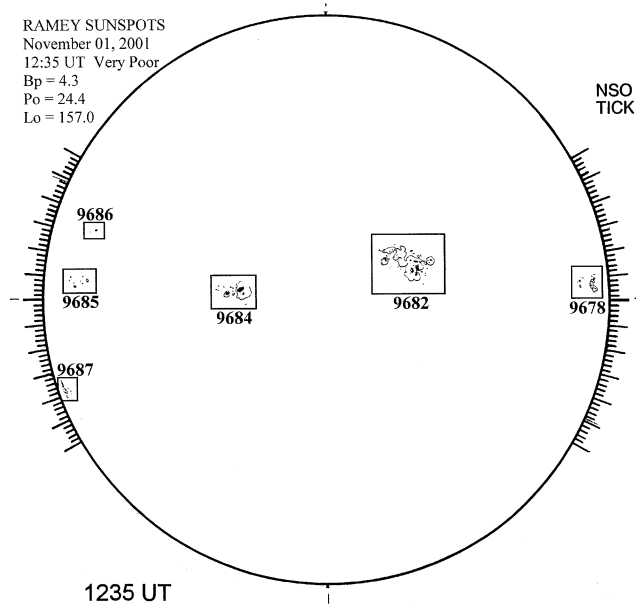

1235 UT

S

SACRAMENTO PEAK CORONA (1.15 Radii)----

NSO / SACRAMENTO PEAK CORONAL DATA
TICK MARKS EVERY 20 MILLIONTHS

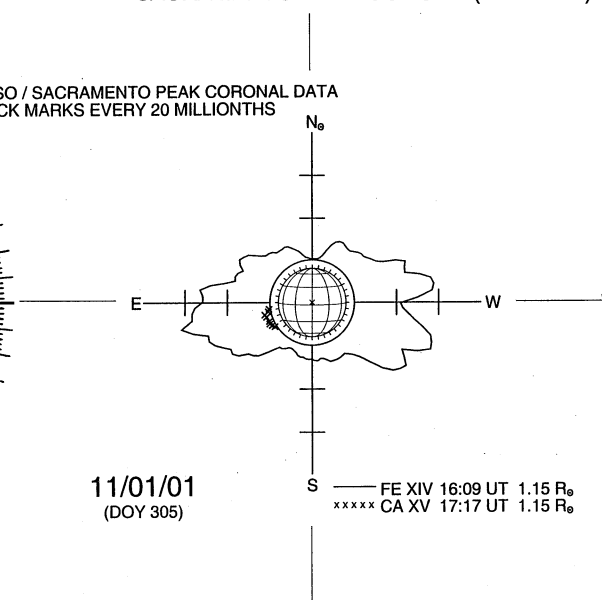

11/01/01
(DOY 305)

—— FE XIV 16:09 UT 1.15 R⊙
xxxxx CA XV 17:17 UT 1.15 R⊙