OCTOBER 24, 2001 (P= 25.58, Bo = 5.13, Lo = 269.11)

KITT PEAK MAGNETOGRAM

868.8 nm

Bright = +
Dark = -

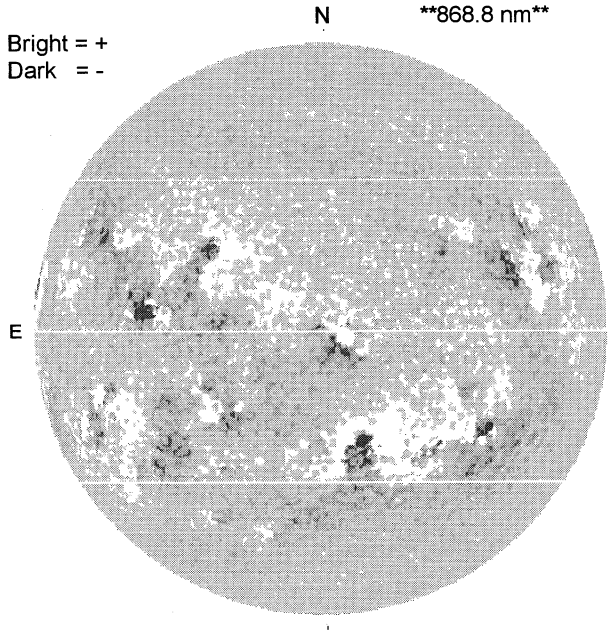

1623 UT

STANFORD MAGNETOGRAM

Solid = +
Dashed = -

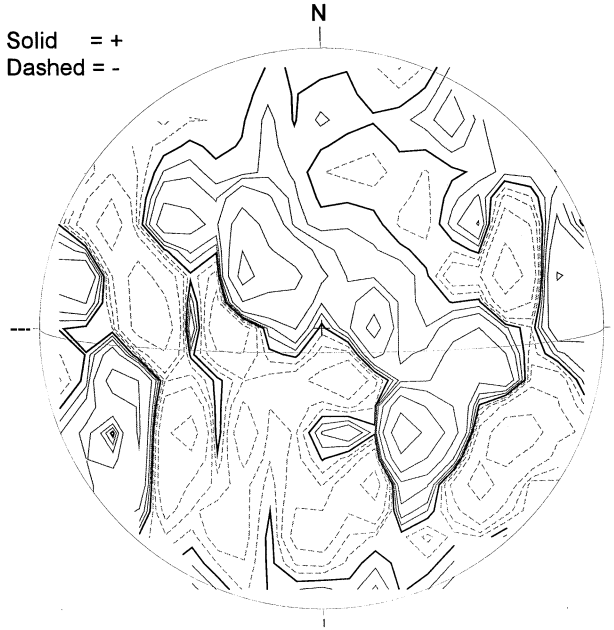

2155 UT

MT. WILSON MAGNETOGRAM

DeltaY = 13.1
DeltaX = 9.6

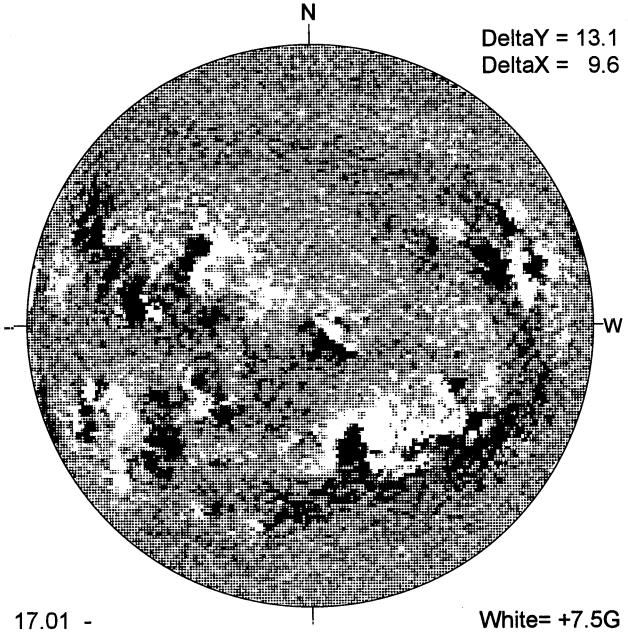

17.01 -
17.97 UT

White= +7.5G
Black = -7.5G

MEUDON H-ALPHA

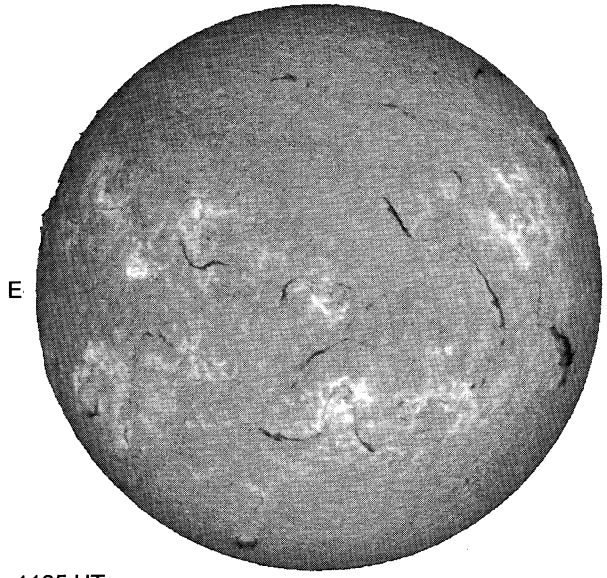

1105 UT

RAMEY SUNSPOT

RAMEY SUNSPOTS
October 24, 2001
13:05 UT Poor
Bp = 5.0
Po = 25.5
Lo = 262.5

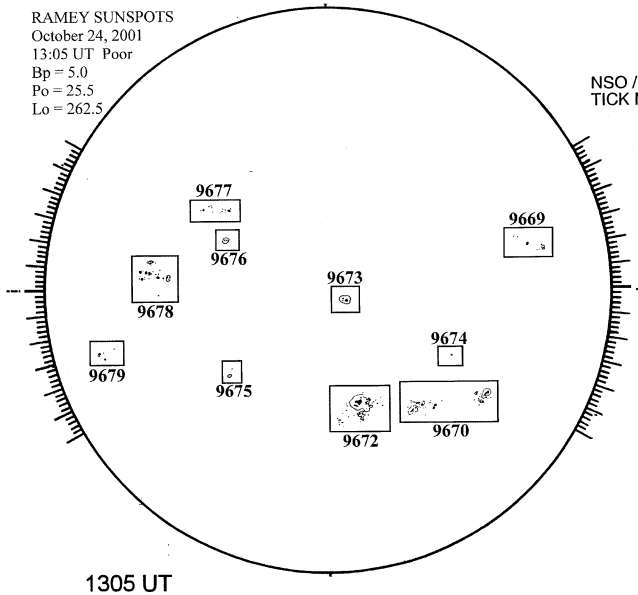

1305 UT

SACRAMENTO PEAK CORONA (1.15 Radii)

NSO / SACRAMENTO PEAK CORONAL DATA
TICK MARKS EVERY 20 MILLIONTHS

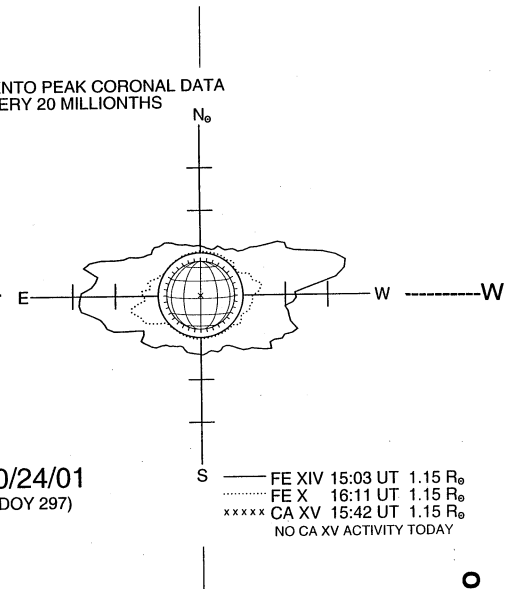

10/24/01
(DOY 297)

FE XIV 15:03 UT 1.15 R☉
FE X 16:11 UT 1.15 R☉
xxxxx CA XV 15:42 UT 1.15 R☉
NO CA XV ACTIVITY TODAY

77
Oct 01