OCTOBER 23, 2001 (P= 25.68, Bo = 5.22, Lo = 282.29)

KITT PEAK MAGNETOGRAM

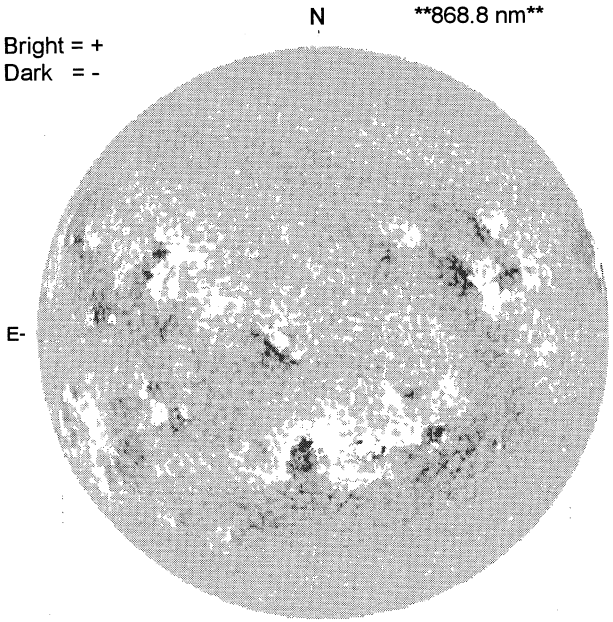

1624 UT

STANFORD MAGNETOGRAM

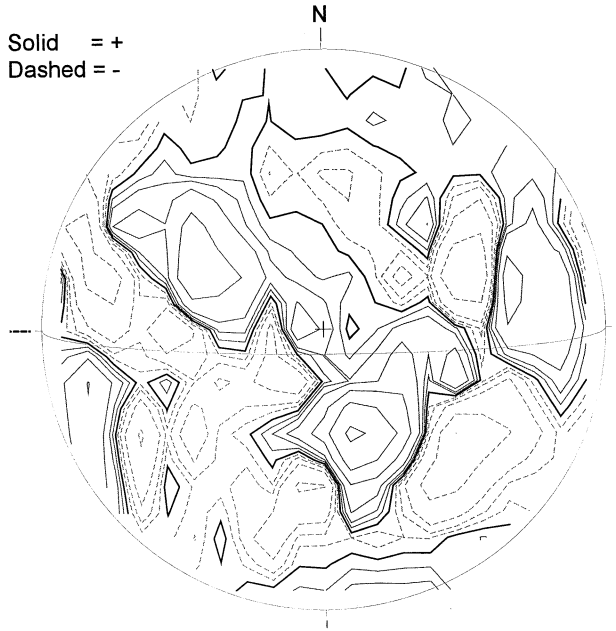

2152 UT

MT. WILSON MAGNETOGRAM

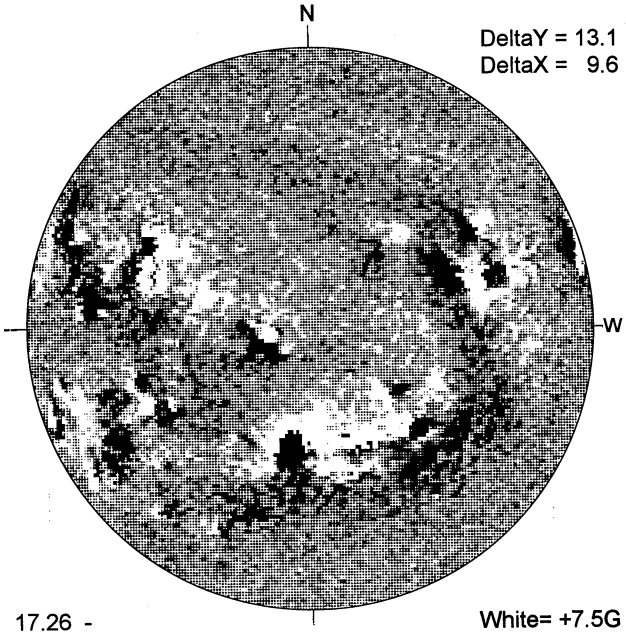

17.26 -
18.22 UT

MEUDON H-ALPHA

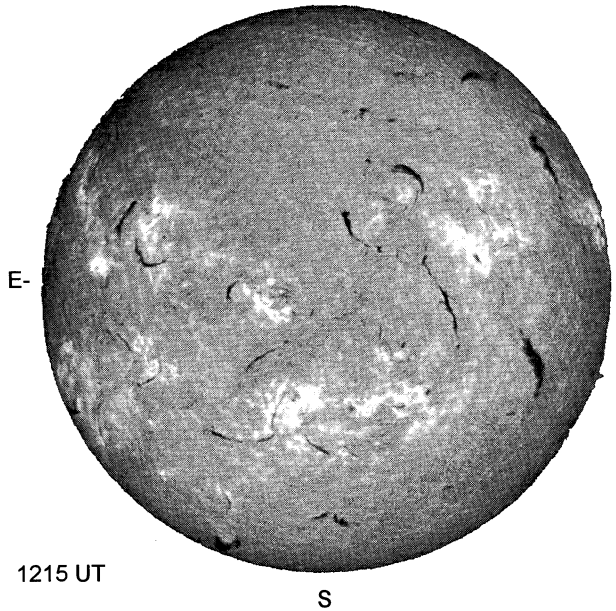

1215 UT

RAMEY SUNSPOT

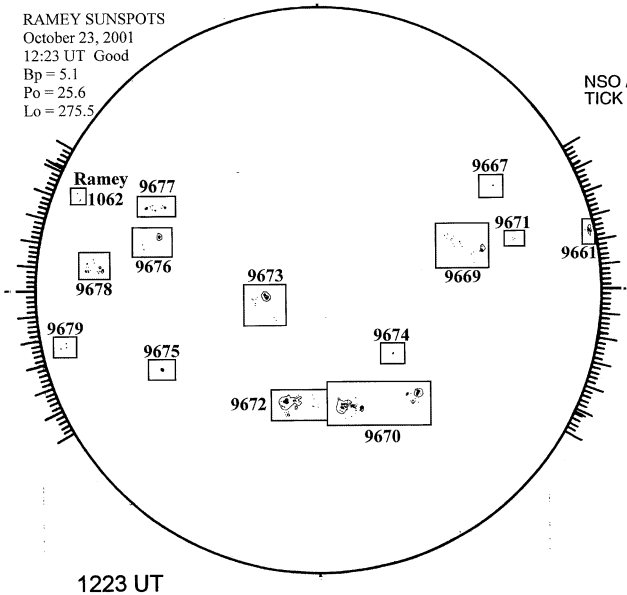

1223 UT

SACRAMENTO PEAK CORONA (1.15 Radii)

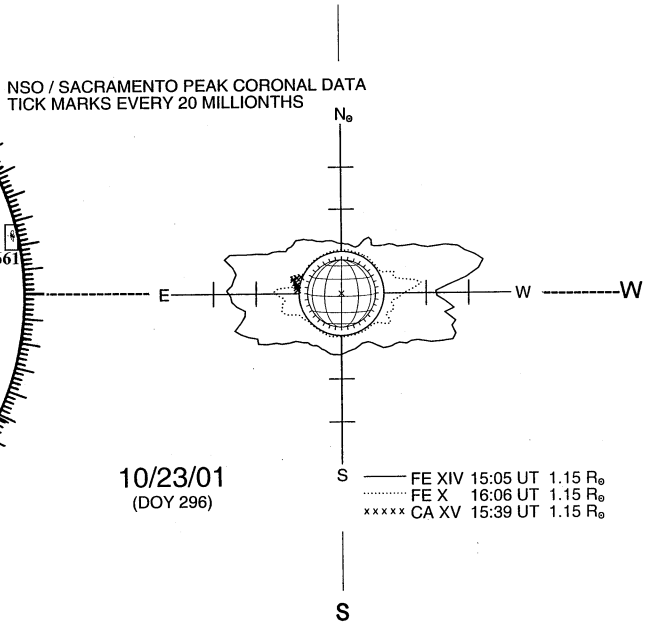

10/23/01
(DOY 296)