OCTOBER 19, 2001 (P= 26.01, Bo = 5.56, Lo = 335.05)

KITT PEAK MAGNETOGRAM

868.8 nm

Bright = +
Dark = -

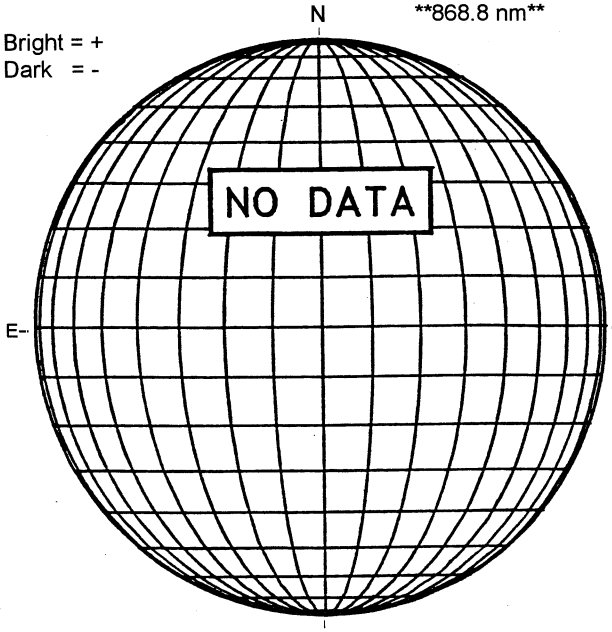

STANFORD MAGNETOGRAM

Solid = +
Dashed = -

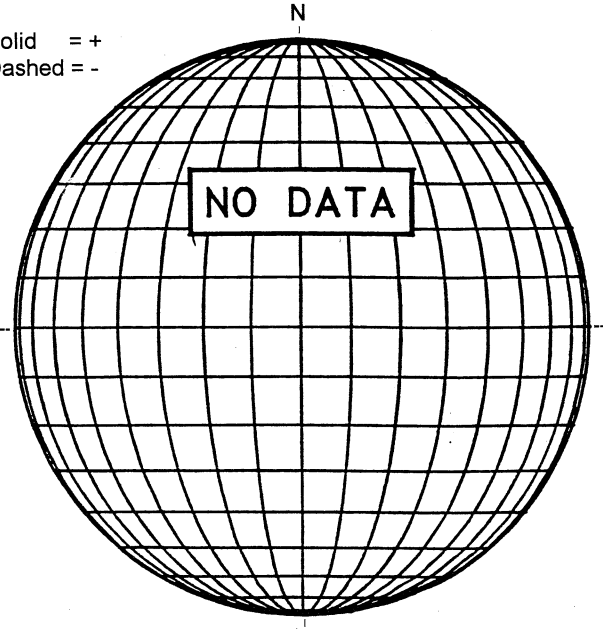

MT. WILSON MAGNETOGRAM

DeltaY =
DeltaX =

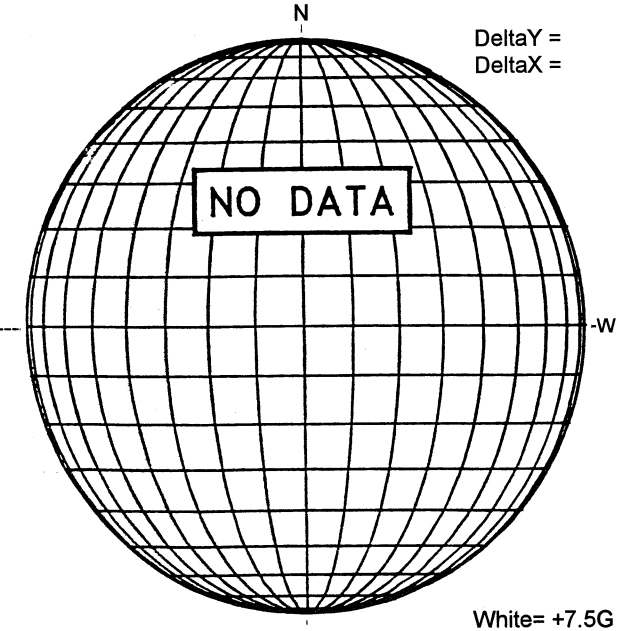

White= +7.5G
Black = -7.5G

MEUDON H-ALPHA

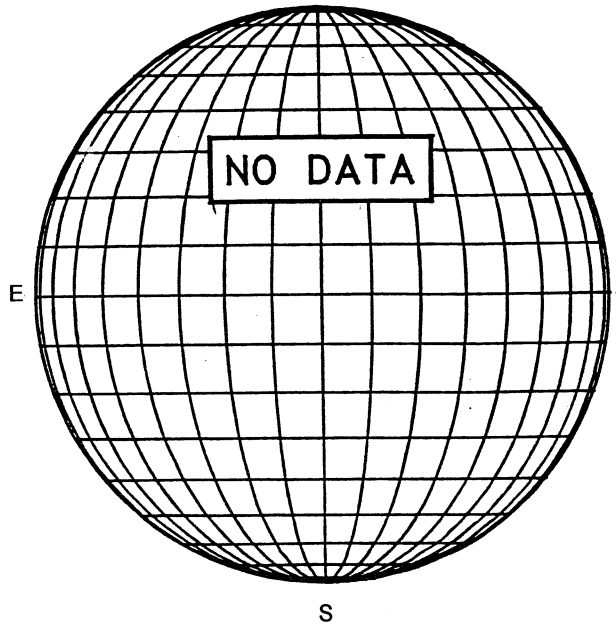

RAMEY SUNSPOT

RAMEY SUNSPOTS
October 19, 2001
12:32 UT Fair
Bp = 5.5
Po = 25.9
Lo = 328.3

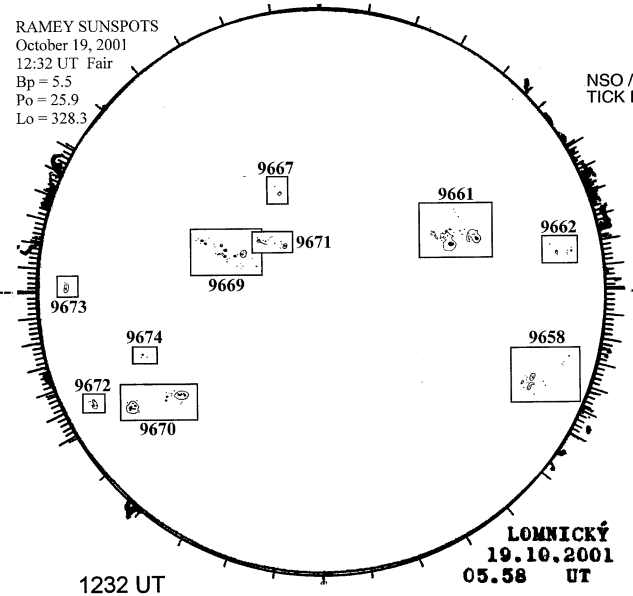

1232 UT
0558 UT LOMN Prom S

SACRAMENTO PEAK CORONA (1.15 Radii)

NSO / SACRAMENTO PEAK CORONAL DATA
TICK MARKS EVERY 20 MILLIONTHS

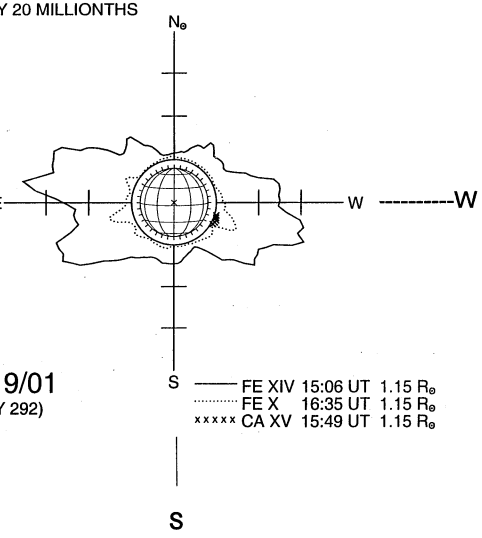

10/19/01
(DOY 292)

FE XIV 15:06 UT 1.15 R⊙
FE X 16:35 UT 1.15 R⊙
xxxxx CA XV 15:49 UT 1.15 R⊙