OCTOBER 18, 2001 (P= 26.07, Bo = 5.64, Lo = 348.24)

KITT PEAK MAGNETOGRAM

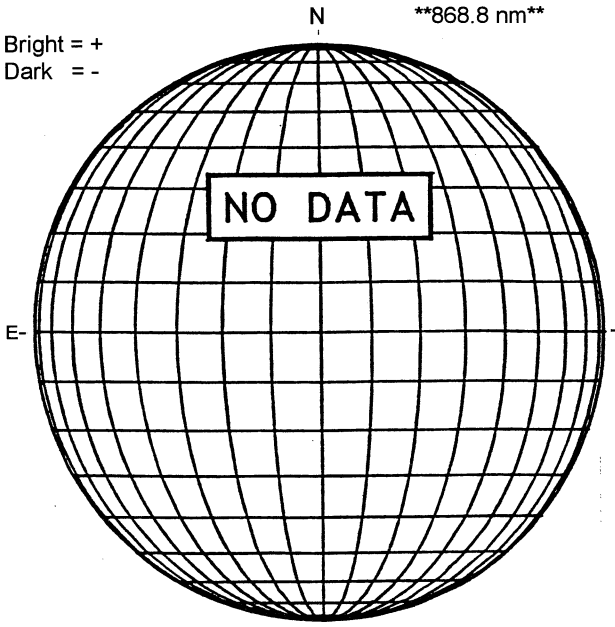

STANFORD MAGNETOGRAM

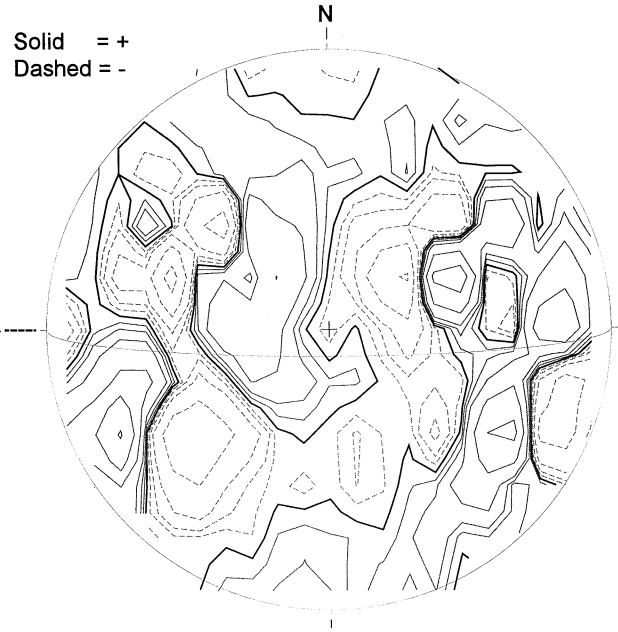

2110 UT

MT. WILSON MAGNETOGRAM

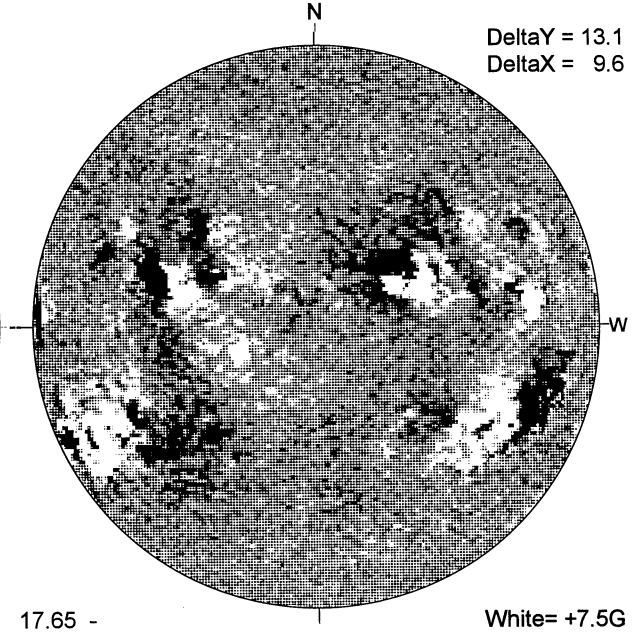

17.65 -
18.61 UT

MEUDON H-ALPHA

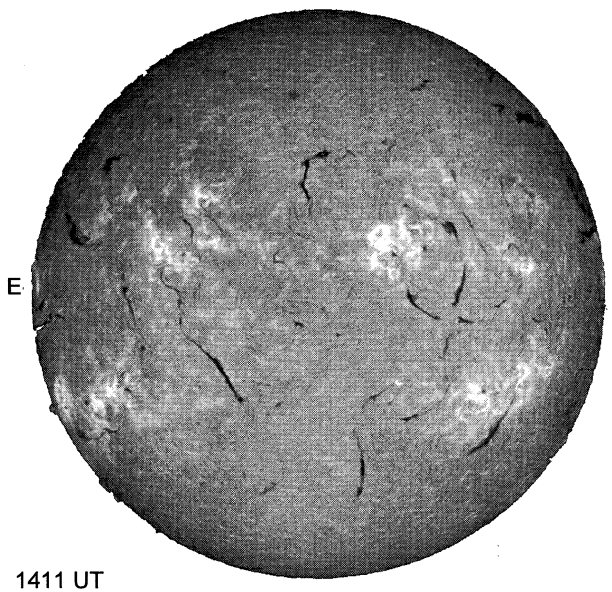

1411 UT

S

RAMEY SUNSPOT

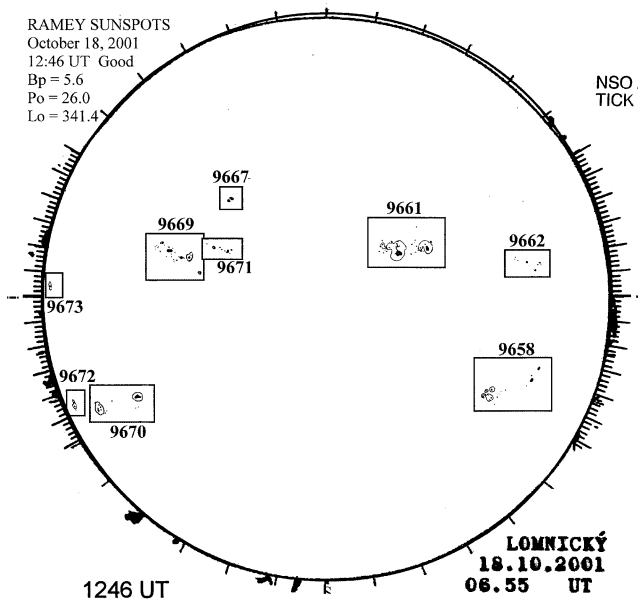

1246 UT
0655 UT LOMN Prom S

SACRAMENTO PEAK CORONA (1.15 Radii)----

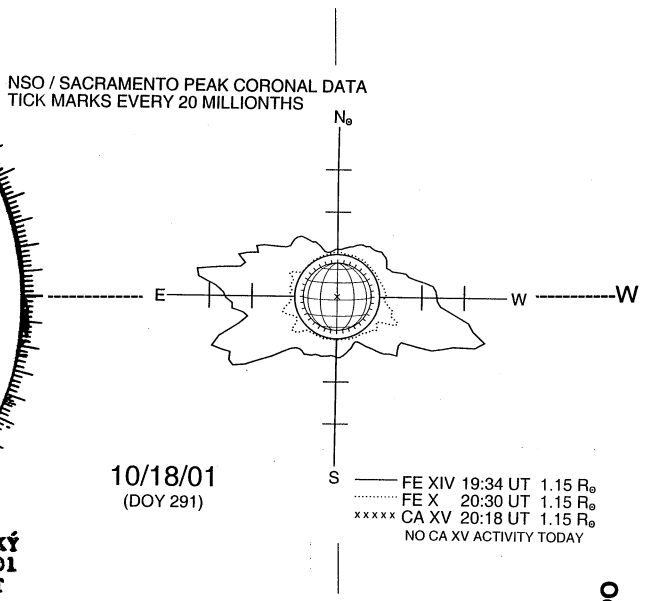

10/18/01
(DOY 291)

S

71
Oct 01