OCTOBER 17, 2001 (P= 26.12, Bo = 5.72, Lo = 1.43)

KITT PEAK MAGNETOGRAM

868.8 nm

Bright = +
Dark = -

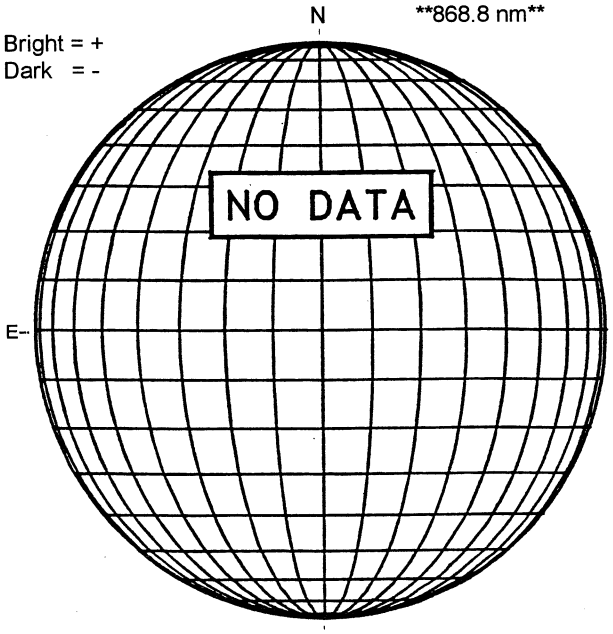

STANFORD MAGNETOGRAM

Solid = +
Dashed = -

2036 UT

MT. WILSON MAGNETOGRAM

DeltaY = 13.1
DeltaX = 9.6

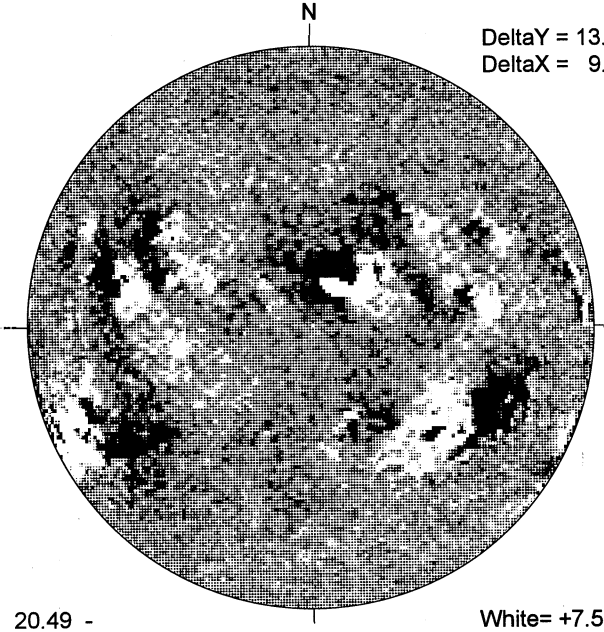

20.49 -
21.45 UT

White= +7.5G
Black = -7.5G

MEUDON H-ALPHA

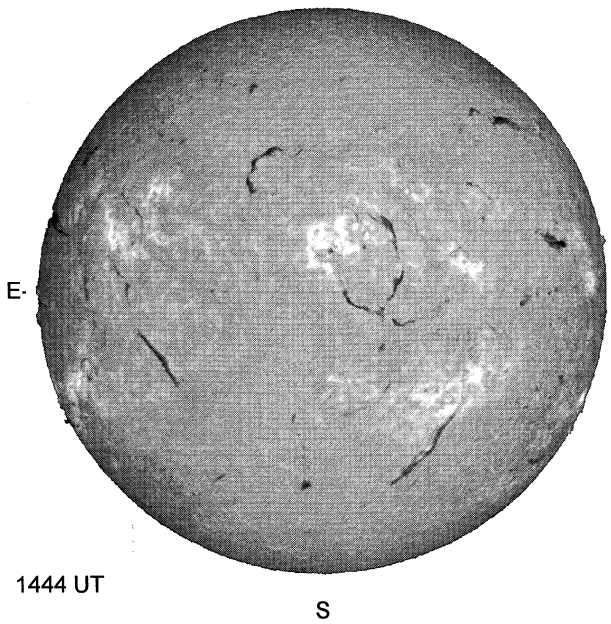

1444 UT

HOLLOMAN SUNSPOT

HOLLOMAN SUNSPOTS
October 17, 2001
15:05 UT Good
Bp = 5.6
Po = 26.0
Lo = 353.6

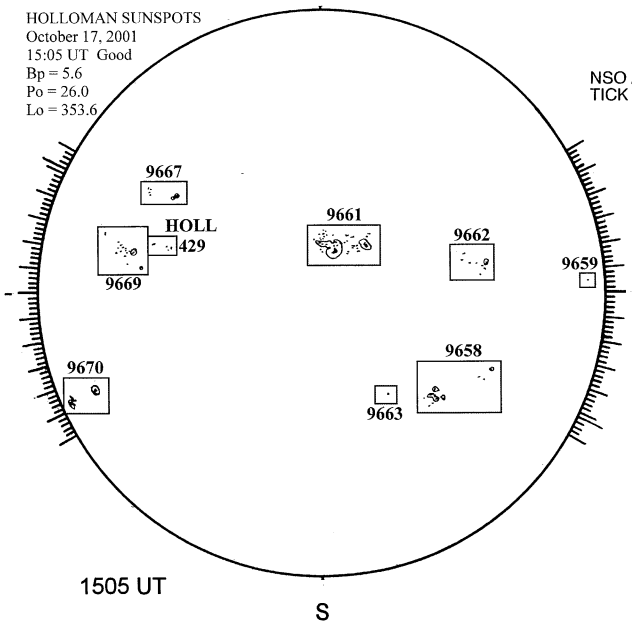

1505 UT

SACRAMENTO PEAK CORONA (1.15 Radii)

NSO / SACRAMENTO PEAK CORONAL DATA
TICK MARKS EVERY 20 MILLIONTHS

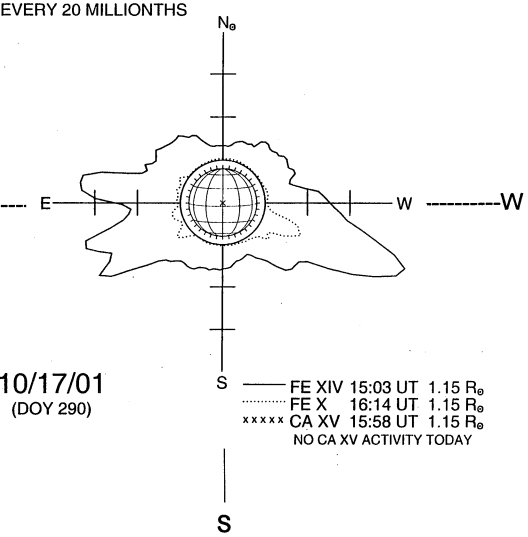

10/17/01
(DOY 290)

FE XIV 15:03 UT 1.15 R⊙
FE X 16:14 UT 1.15 R⊙
xxxxx CA XV 15:58 UT 1.15 R⊙
NO CA XV ACTIVITY TODAY