**OCTOBER 16, 2001 ( P= 26.17, Bo = 5.79, Lo = 14.62)**

KITT PEAK MAGNETOGRAM

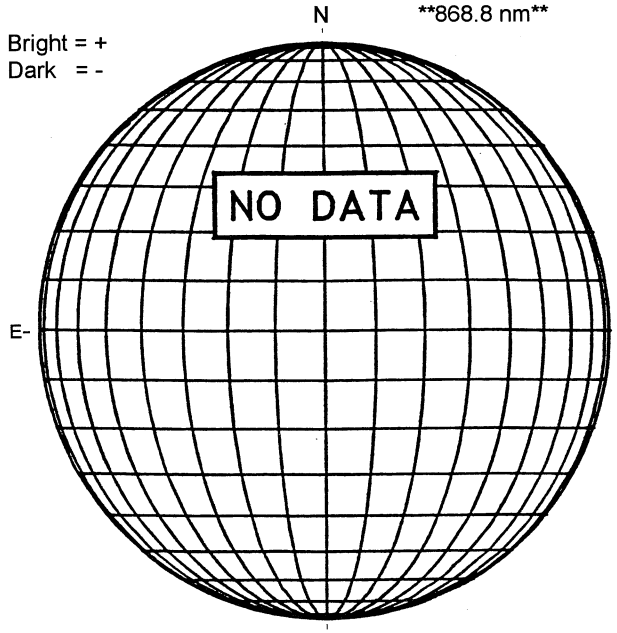


STANFORD MAGNETOGRAM

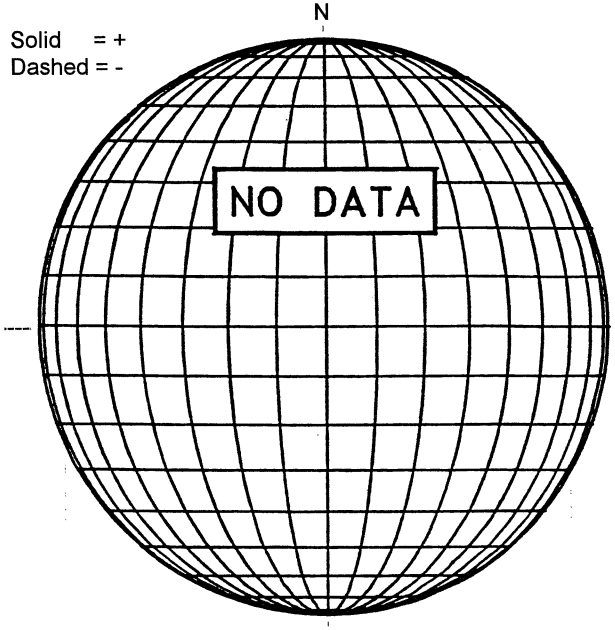


MT. WILSON MAGNETOGRAM

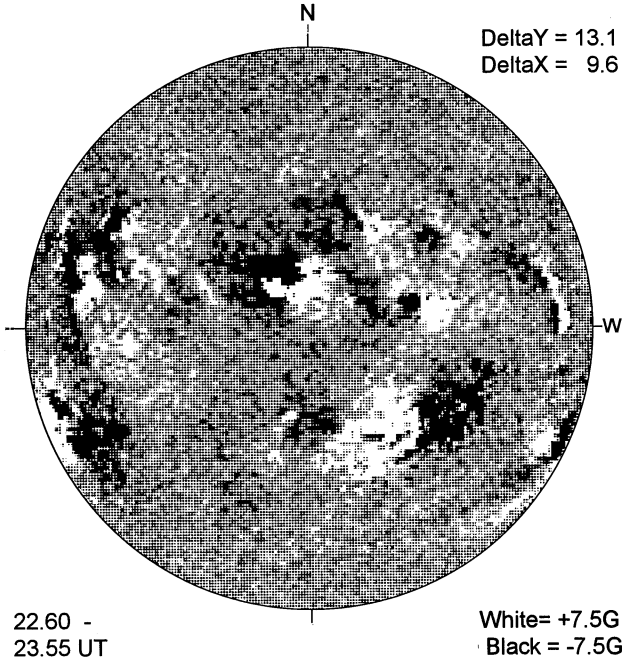


MEUDON H-ALPHA

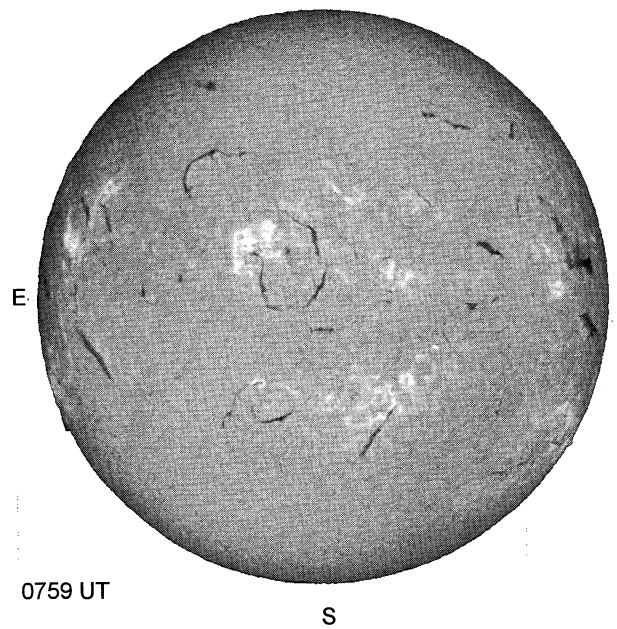


RAMEY SUNSPOT

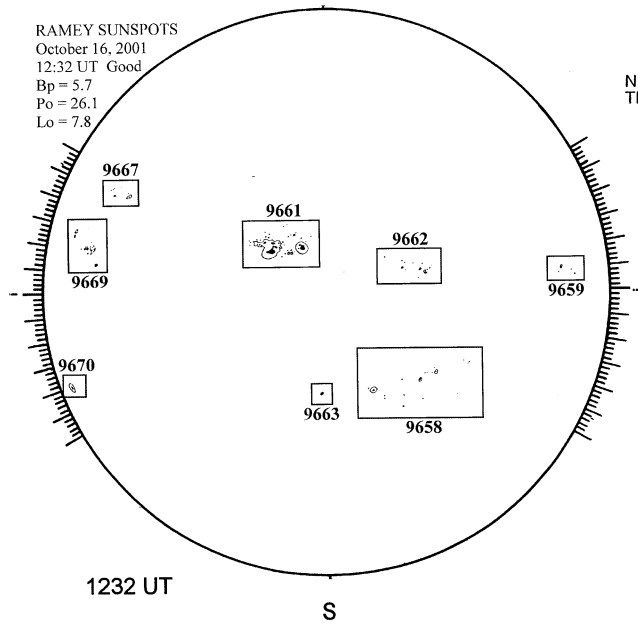

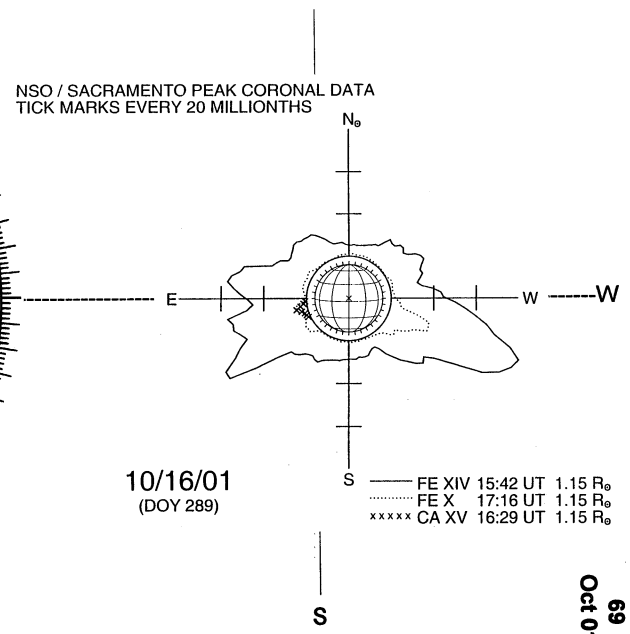
SACRAMENTO PEAK CORONA (1.15 Radii)