OCTOBER 15, 2001 (P= 26.21, Bo = 5.87, Lo = 27.81)

KITT PEAK MAGNETOGRAM

Bright = +
Dark = -

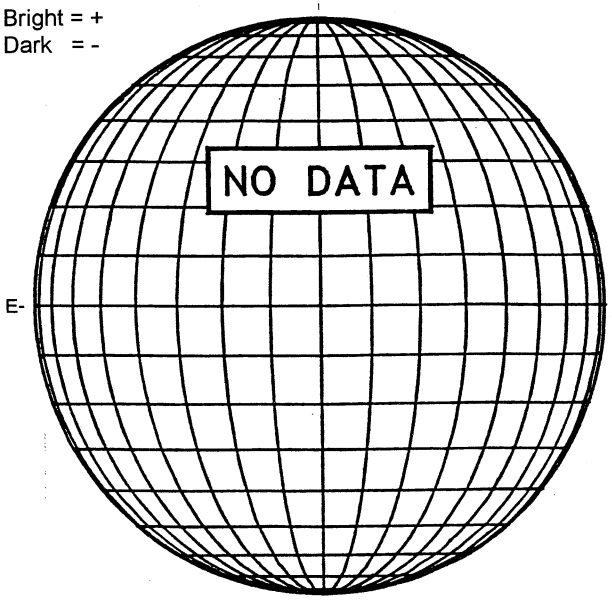

STANFORD MAGNETOGRAM

Solid = +
Dashed = -

2058 UT

MT. WILSON MAGNETOGRAM

DeltaY = 13.1
DeltaX = 9.6

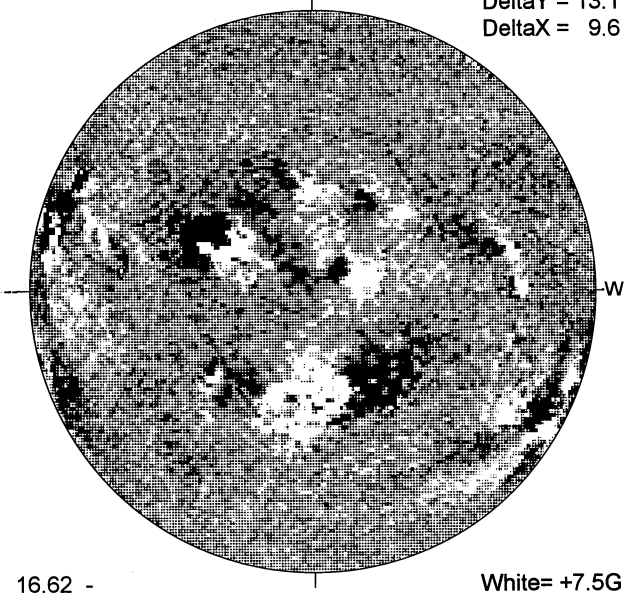

16.62 -
17.57 UT

White= +7.5G
Black = -7.5G

MEUDON H-ALPHA

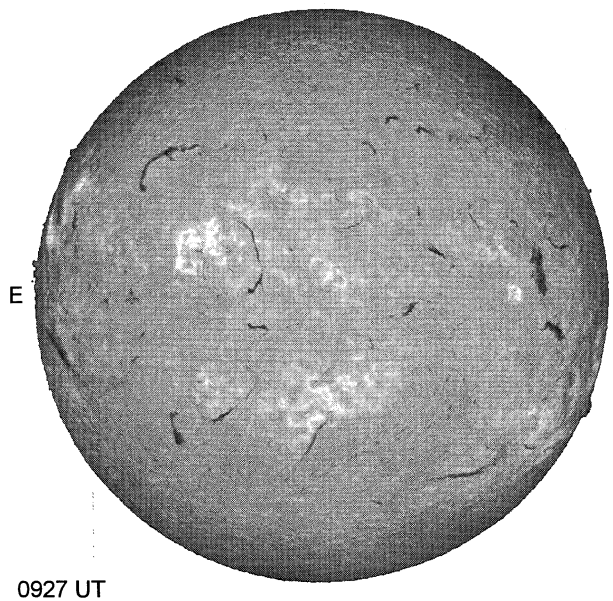

0927 UT

S

RAMEY SUNSPOT

RAMEY SUNSPOTS
October 15, 2001
11:55 UT Fair
Bp = 5.8
Po = 21.4
Lo = 21.1

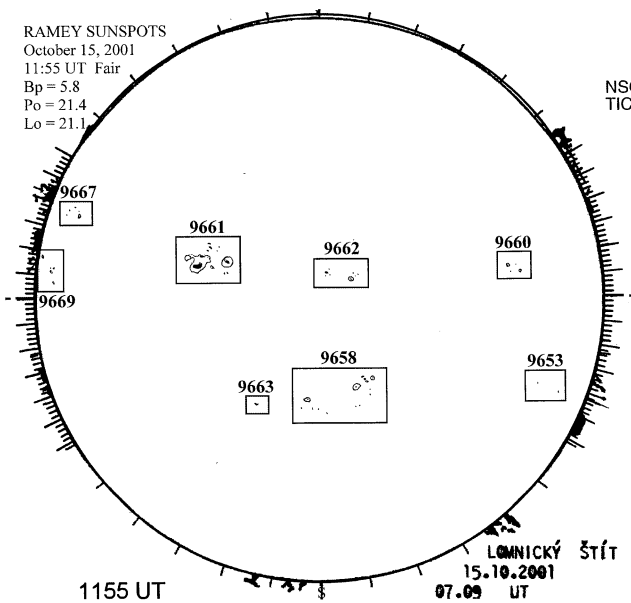

1155 UT
0709 UT LOMN Prom S

SACRAMENTO PEAK CORONA (1.15 Radii)

NSO / SACRAMENTO PEAK CORONAL DATA
TICK MARKS EVERY 20 MILLIONTHS

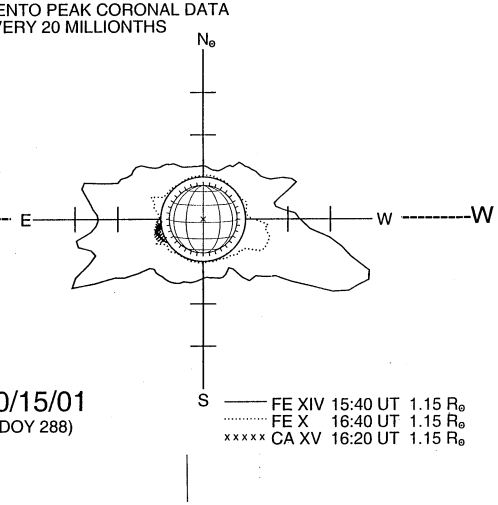

10/15/01
(DOY 288)

S