OCTOBER 10, 2001 (P= 26.29, Bo = 6.21 Lo = 93.77)

KITT PEAK MAGNETOGRAM

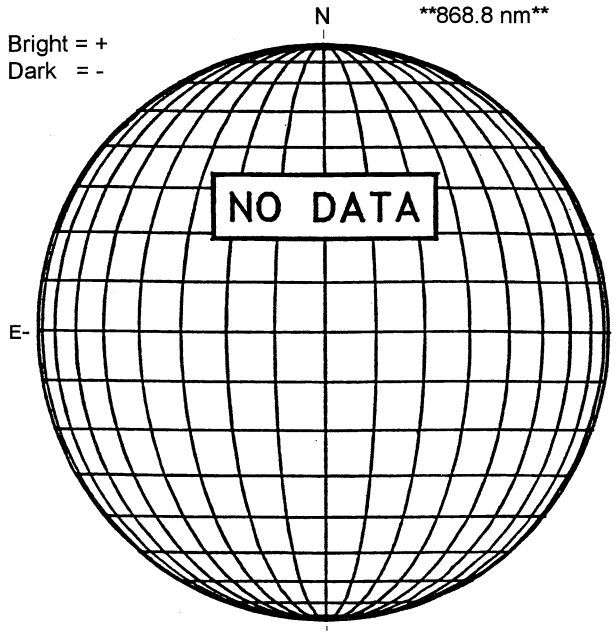

STANFORD MAGNETOGRAM

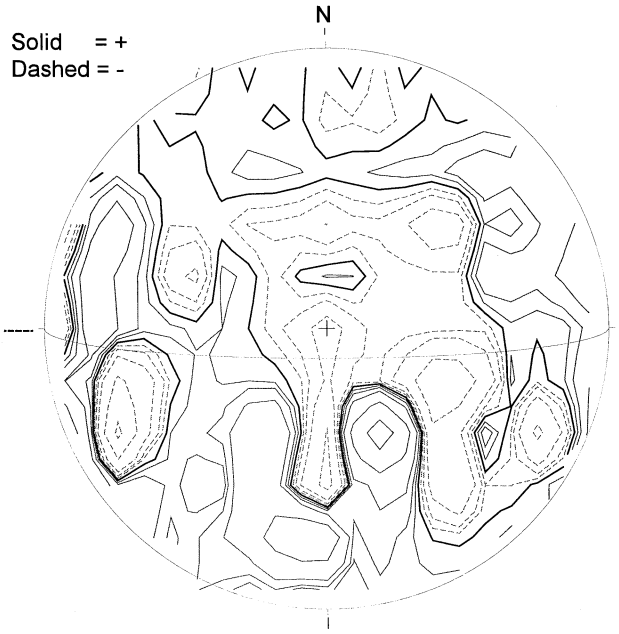

1854 UT

MT. WILSON MAGNETOGRAM

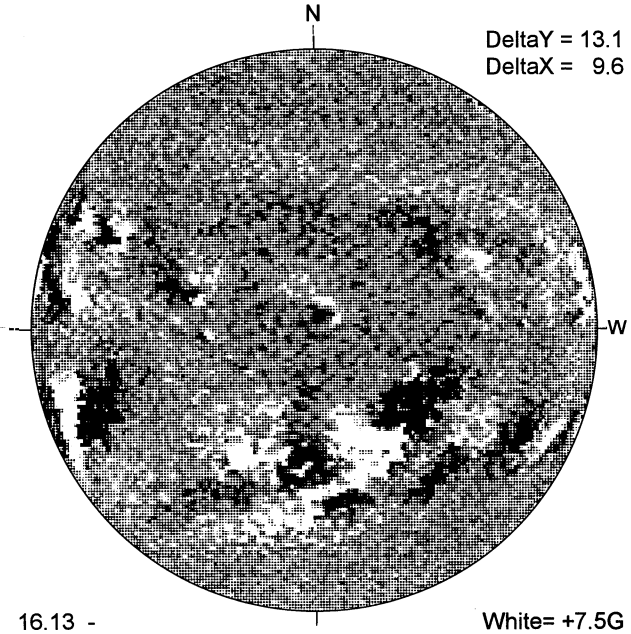

16.13 -
17.07 UT

White= +7.5G
Black = -7.5G

----- MEUDON H-ALPHA

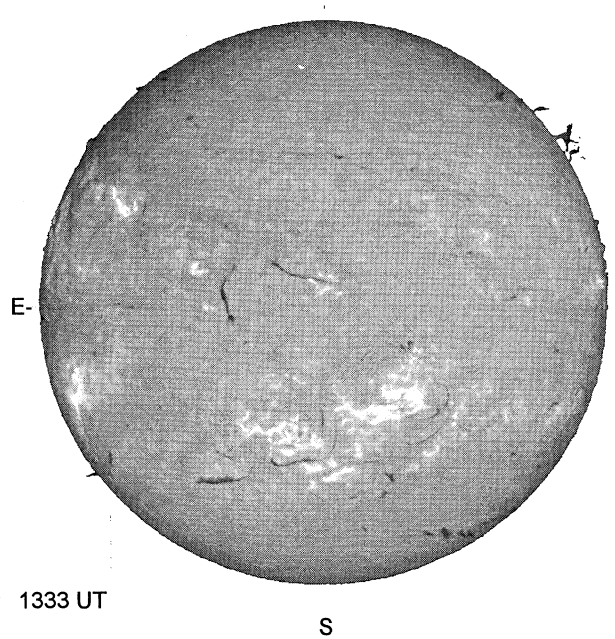

1333 UT

RAMEY SUNSPOTS

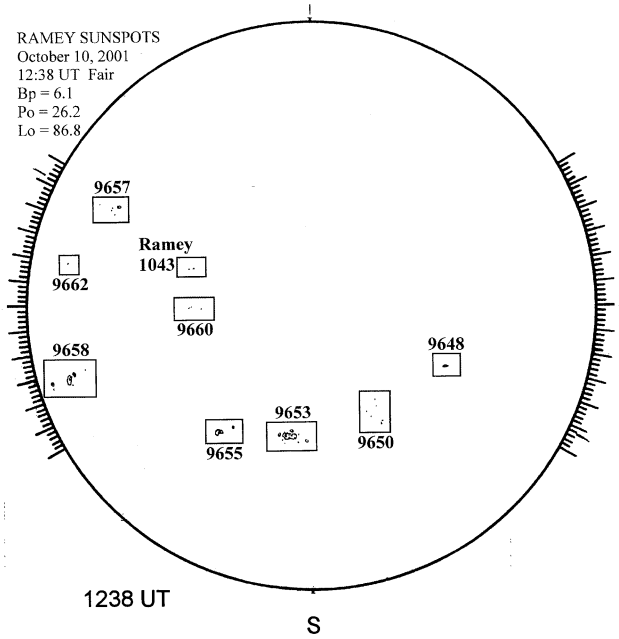

1238 UT
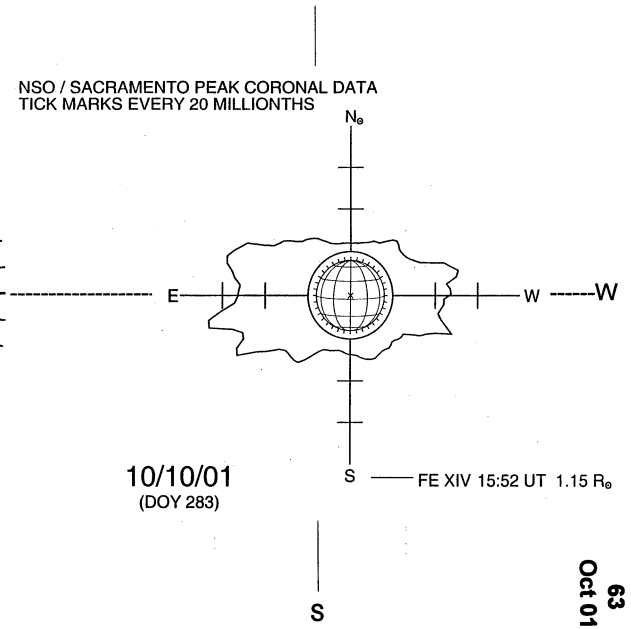
SACRAMENTO PEAK CORONA (1.15 Radii)----