OCTOBER 9, 2001 (P= 26.29, Bo = 6.28, Lo = 106.96)

KITT PEAK MAGNETOGRAM

**868.8 nm

Bright = +
Dark = -

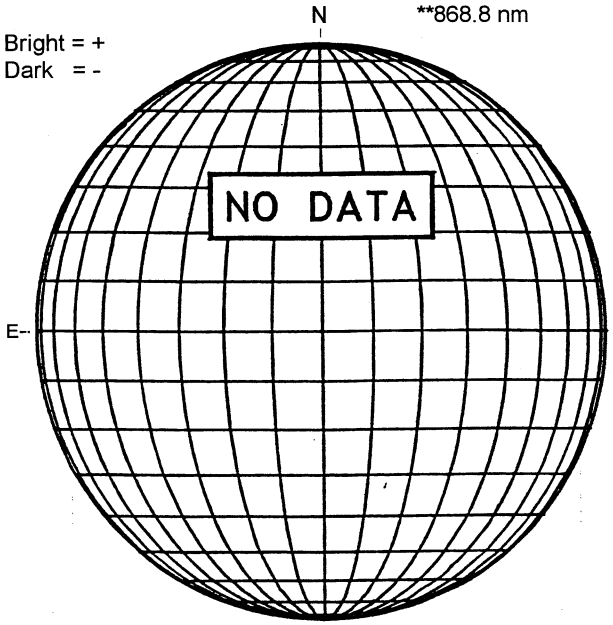

STANFORD MAGNETOGRAM

Solid = +
Dashed = -

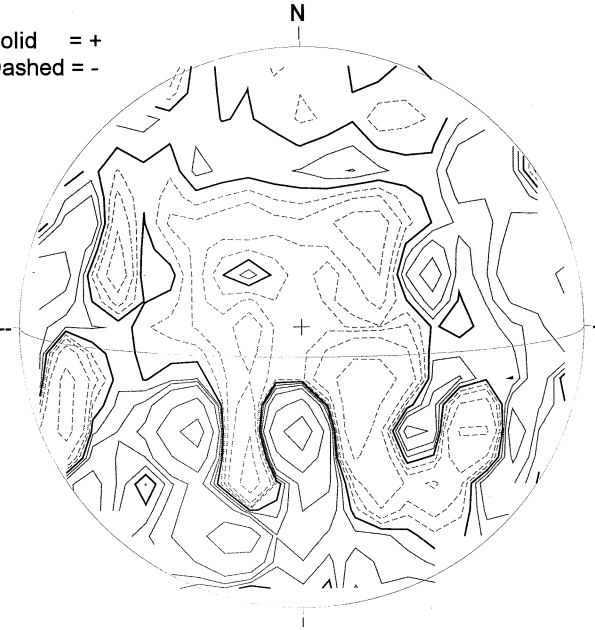

2144 UT

MT. WILSON MAGNETOGRAM

DeltaY = 13.1
DeltaX = 9.6

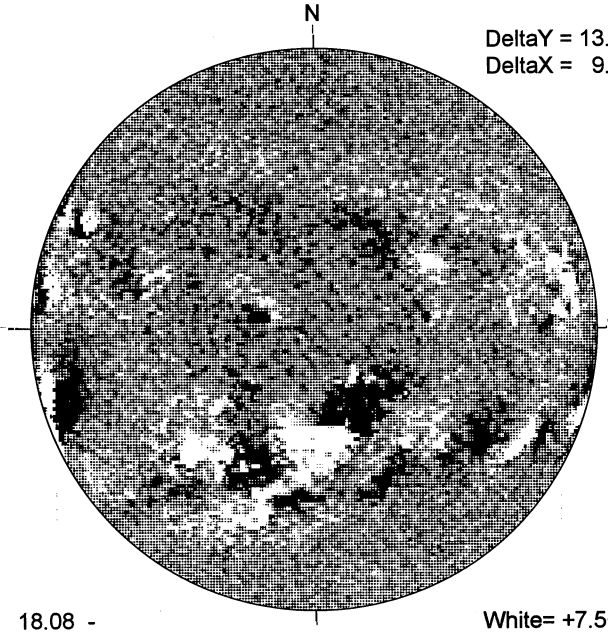

18.08 -
19.03 UT

White= +7.5G
Black = -7.5G

MEUDON H-ALPHA

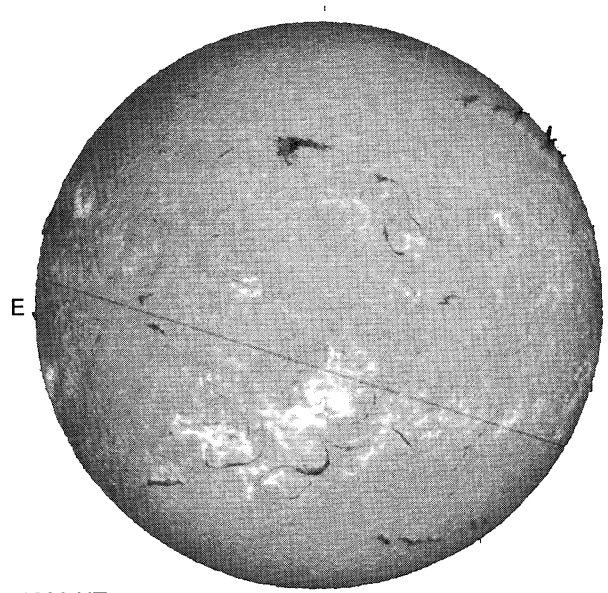

1028 UT

S

RAMEY SUNSPOT

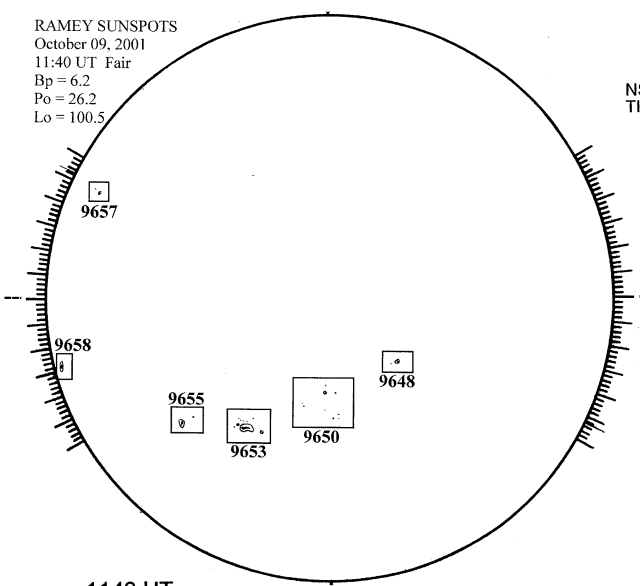

1140 UT

S

SACRAMENTO PEAK CORONA (1.15 Radii)

NSO / SACRAMENTO PEAK CORONAL DATA
TICK MARKS EVERY 20 MILLIONTHS

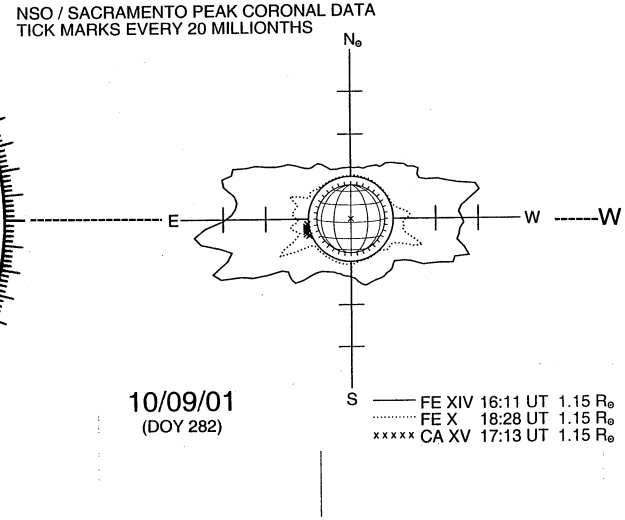

10/09/01
(DOY 282)

S