SEPTEMBER 29, 2001 (P= 25.84, Bo = 6.81, Lo = 238.91)

KITT PEAK MAGNETOGRAM

N **868.8 nm**

Bright = +
Dark = -

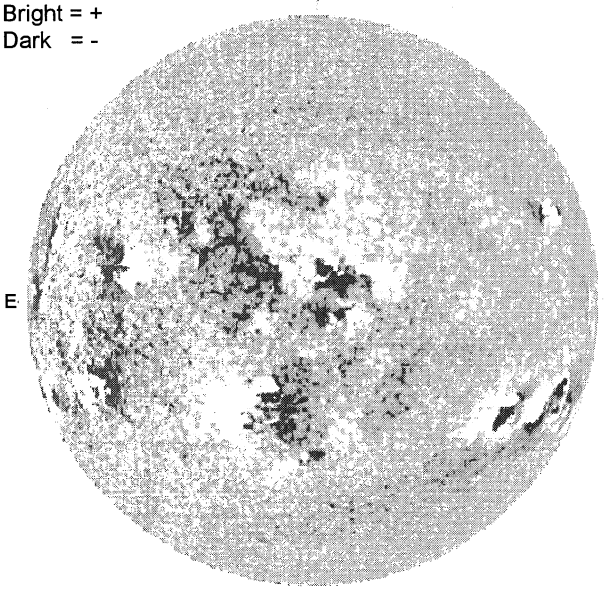

E

1848 UT

STANFORD MAGNETOGRAM

N

Solid = +
Dashed = -

2213 UT

MT. WILSON MAGNETOGRAM

N

DeltaY = 13.1
DeltaX = 9.6

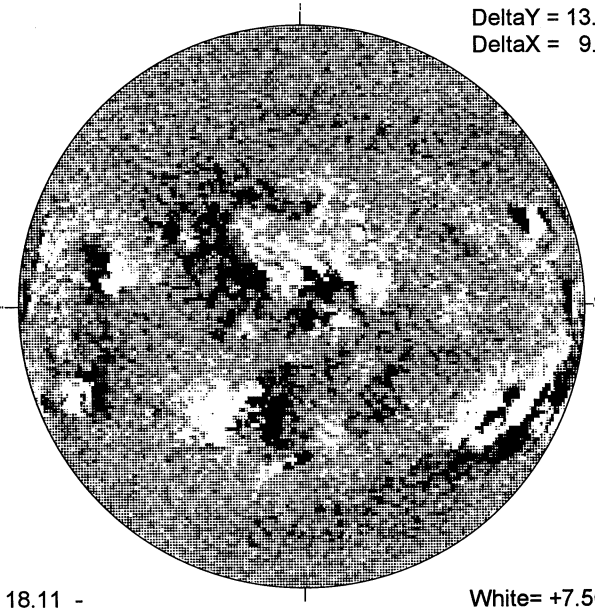

W

18.11 -
19.05 UT

White= +7.5G
Black = -7.5G

MEUDON H-ALPHA

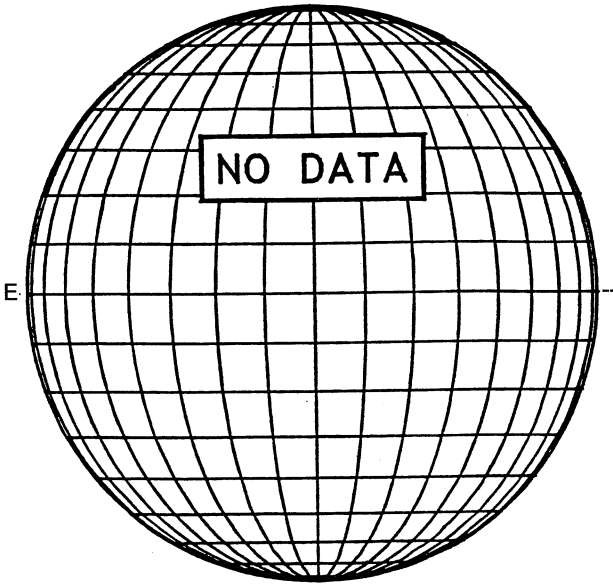

E

S

RAMEY SUNSPOT

RAMEY SUNSPOTS
September 29, 2001
12:18 UT Fair
Bp = 6.7
Po = 25.8
Lo = 232.1

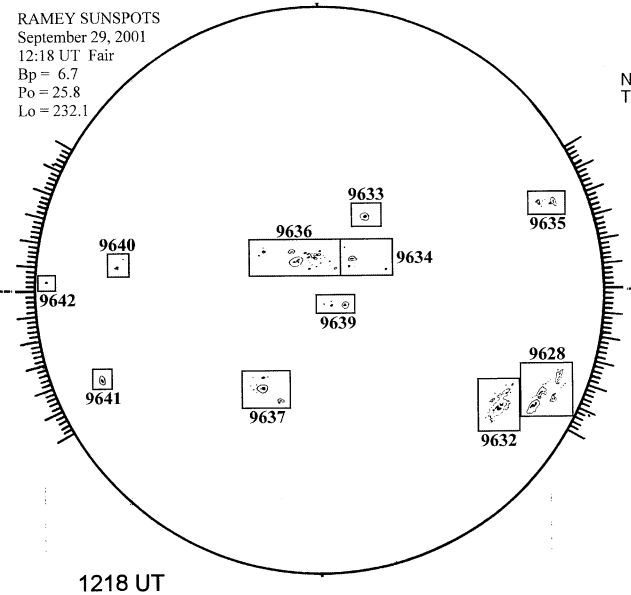

1218 UT

S

SACRAMENTO PEAK CORONA (1.15 Radii)----

NSO / SACRAMENTO PEAK CORONAL DATA
TICK MARKS EVERY 20 MILLIONTHS

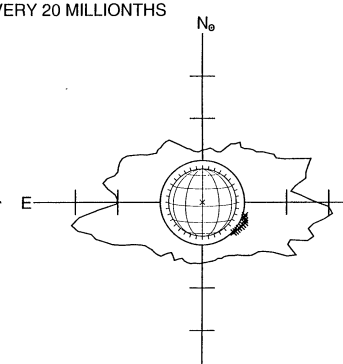

09/29/01
(DOY 272)

—— FE XIV 16:39 UT 1.15 R⊙
xxxxx CA XV 17:21 UT 1.15 R⊙

S