SEPTEMBER 28, 2001 (P= 25.75, Bo = 6.85, Lo = 252.11)

KITT PEAK MAGNETOGRAM

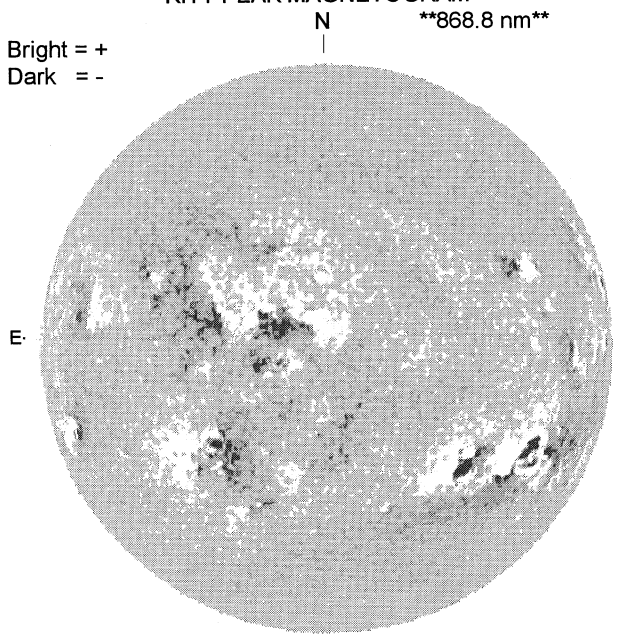

STANFORD MAGNETOGRAM

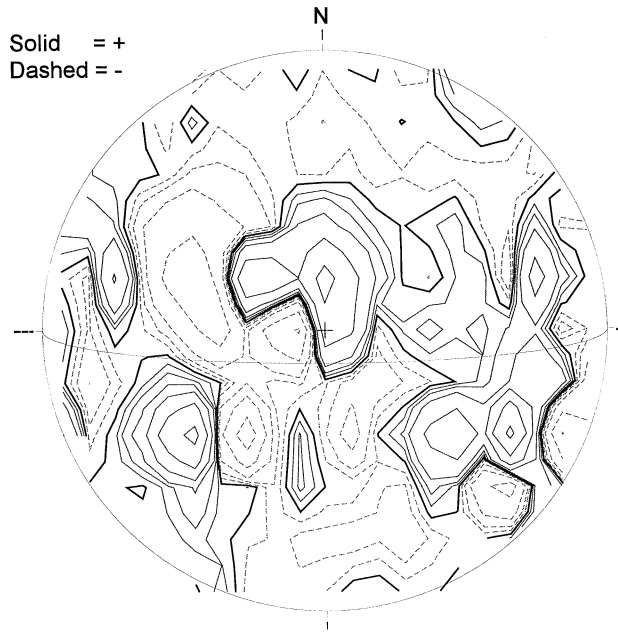

MT. WILSON MAGNETOGRAM

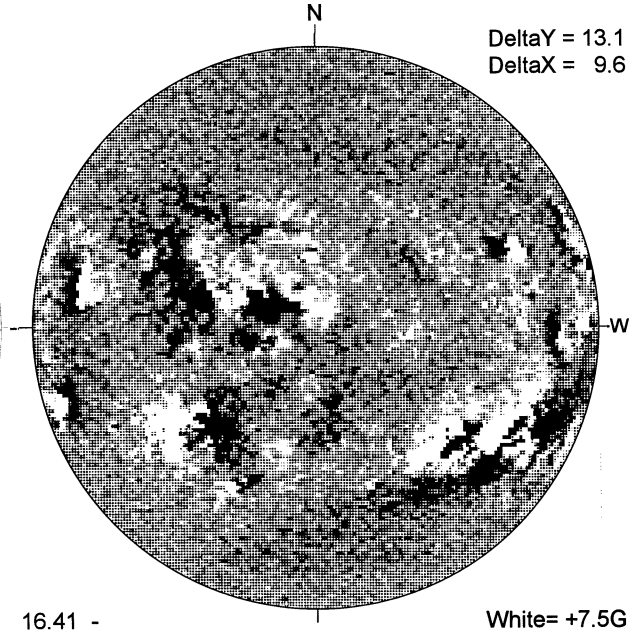

MEUDON H-ALPHA

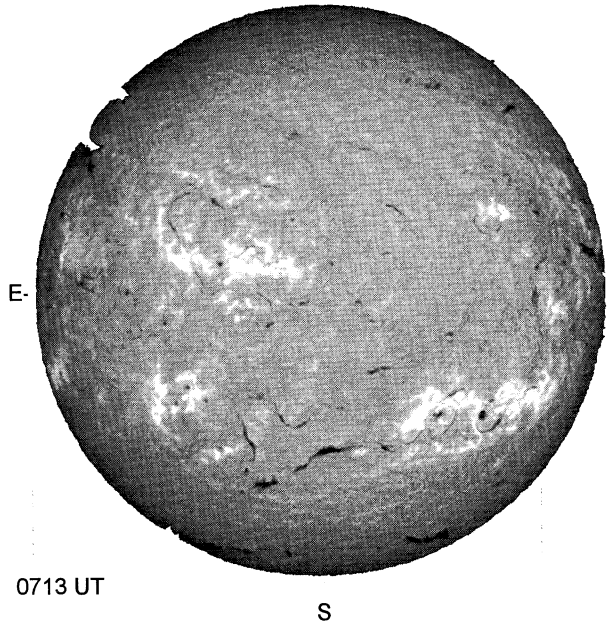

RAMEY SUNSPOT

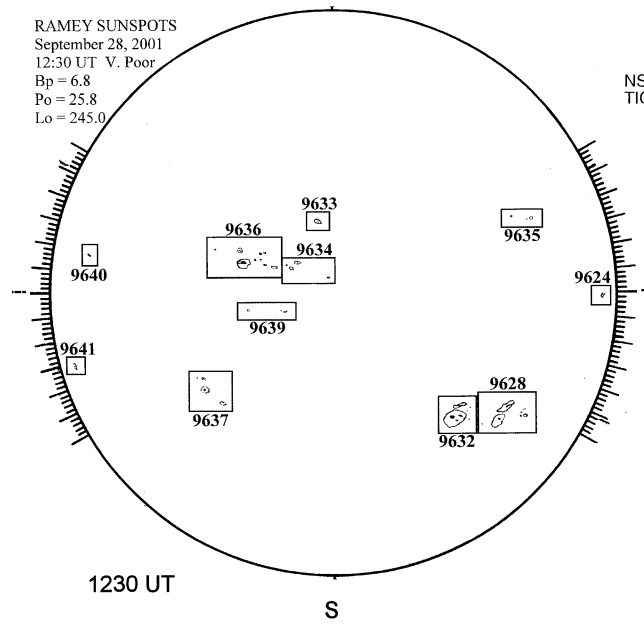

SACRAMENTO PEAK CORONA (1.15 Radii)

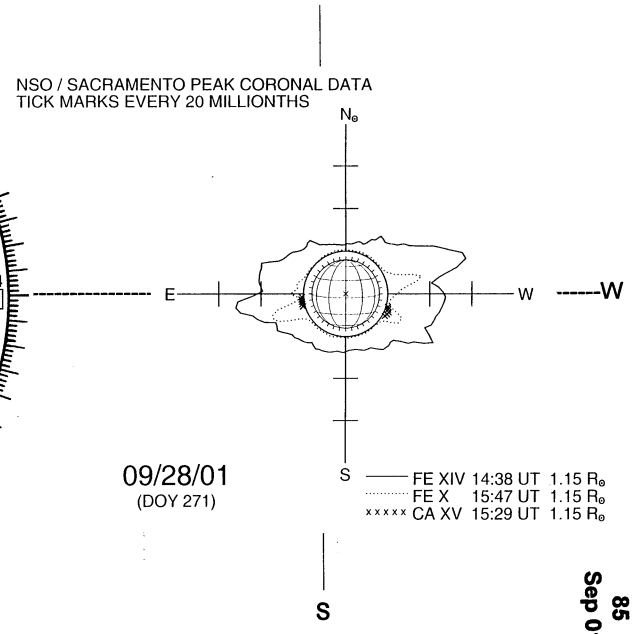

85
Sep 01