SEPTEMBER 27, 2001 (P= 25.66, Bo = 6.89, Lo = 265.30)

KITT PEAK MAGNETOGRAM

N **868.8 nm**

Bright = +
Dark = -

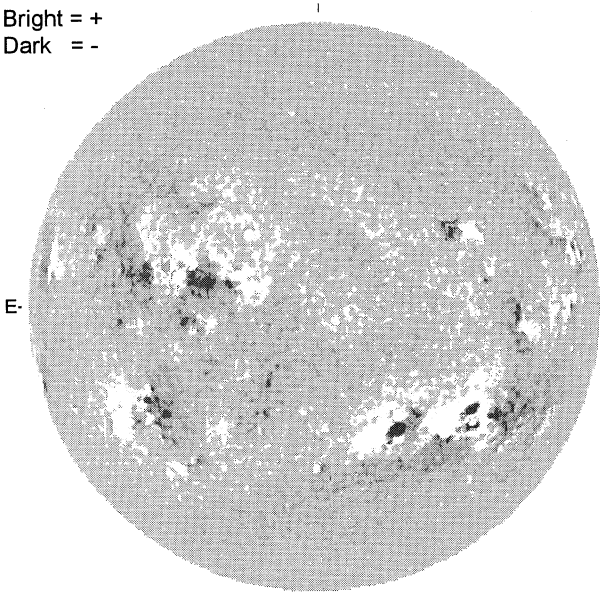

E-

1544 UT

STANFORD MAGNETOGRAM

N

Solid = +
Dashed = -

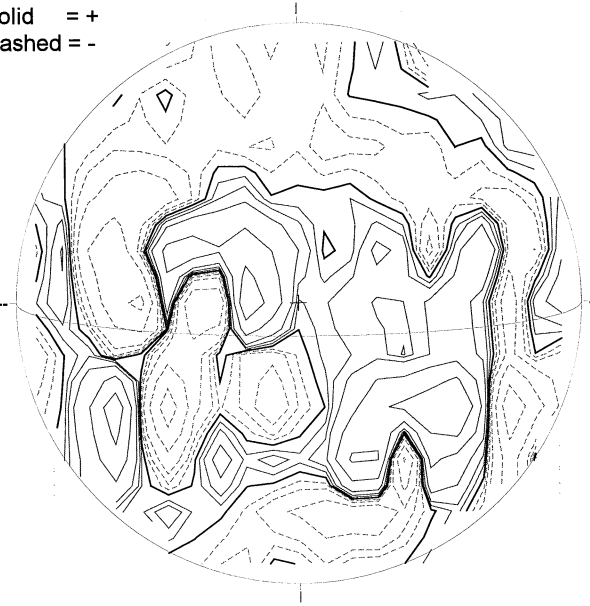

2340 UT

MT. WILSON MAGNETOGRAM

N

DeltaY = 13.1
DeltaX = 9.6

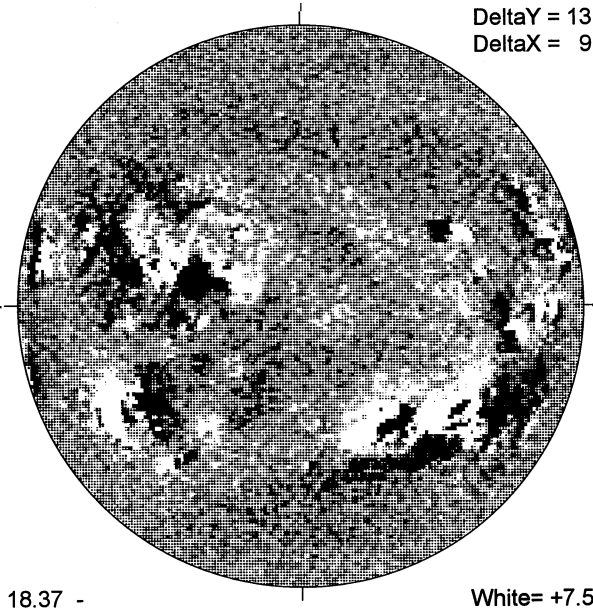

-W

18.37 -
19.31 UT

White= +7.5G
Black = -7.5G

MEUDON H-ALPHA

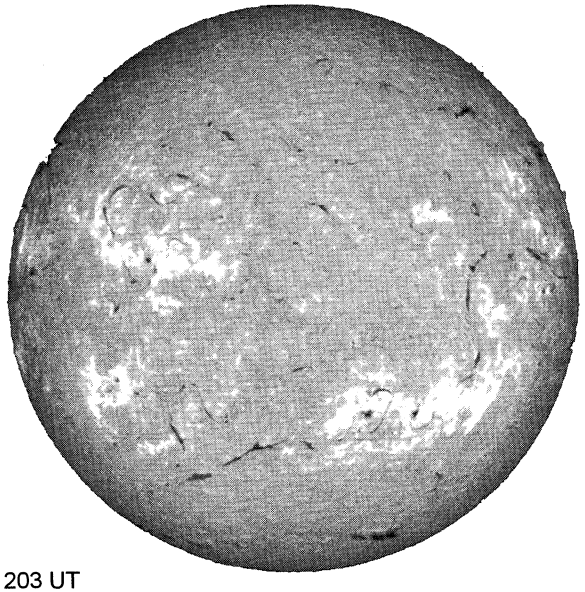

E

1203 UT

S

RAMEY SUNSPOT

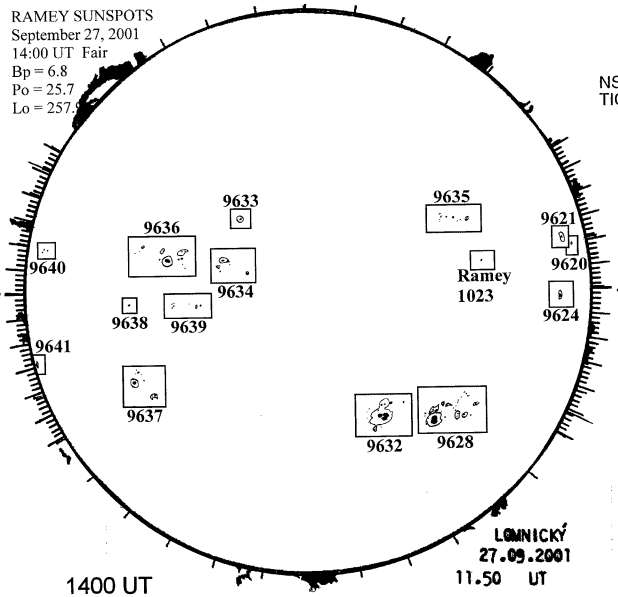

1400 UT
1150 UT LOMN Prom S

SACRAMENTO PEAK CORONA (1.15 Radii)----

NSO / SACRAMENTO PEAK CORONAL DATA
TICK MARKS EVERY 20 MILLIONTHS

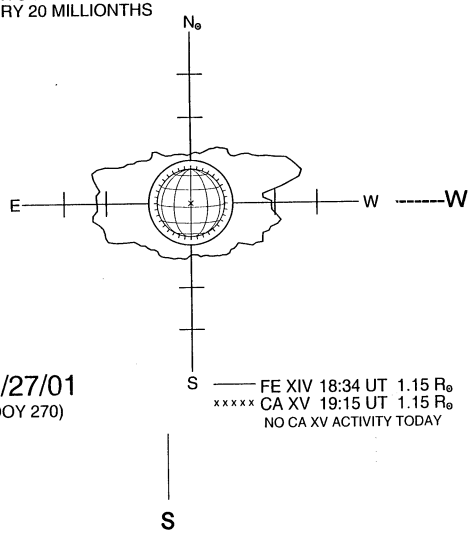

09/27/01
(DOY 270)

FE XIV 18:34 UT 1.15 $R_\odot$
xxxxx CA XV 19:15 UT 1.15 $R_\odot$
NO CA XV ACTIVITY TODAY

S