SEPTEMBER 25, 2001 (P= 25.46, Bo = 6.96, Lo = 291.70)

KITT PEAK MAGNETOGRAM

868.8 nm

Bright = +
Dark = -

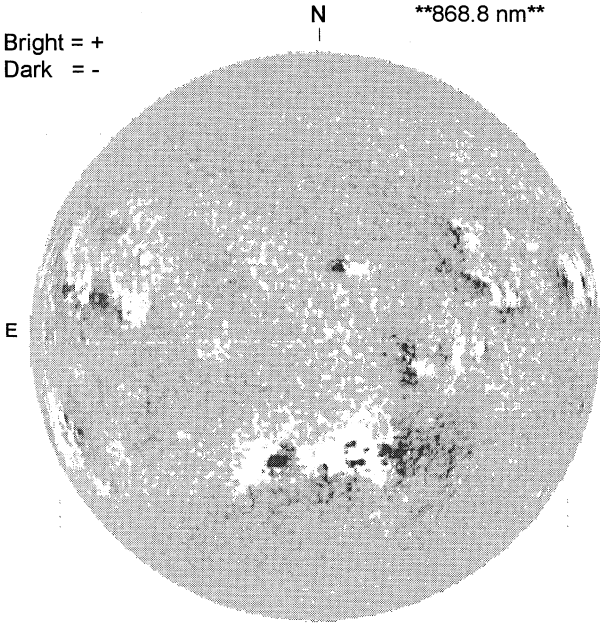

1519 UT

STANFORD MAGNETOGRAM

Solid = +
Dashed = -

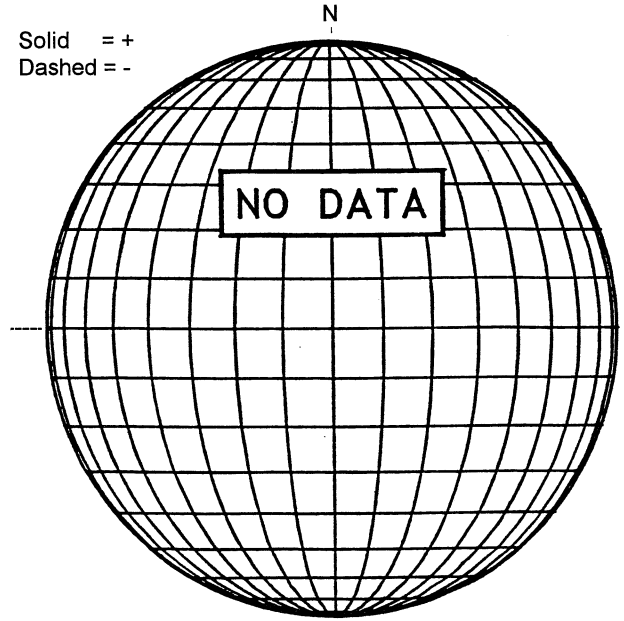

MT. WILSON MAGNETOGRAM

DeltaY = 13.1
DeltaX = 9.6

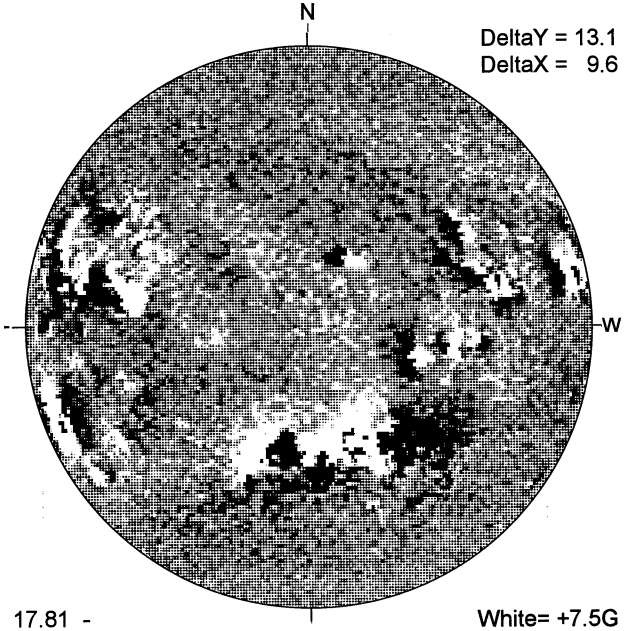

17.81 -
18.75 UT

White= +7.5G
Black = -7.5G

MEUDON H-ALPHA

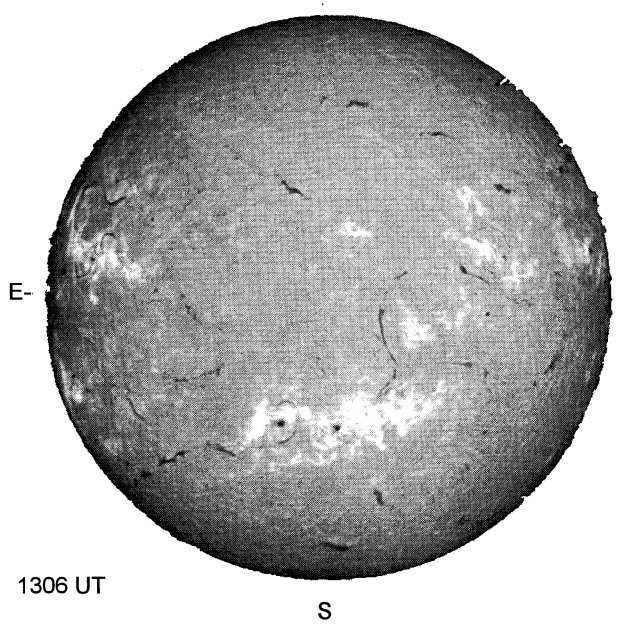

1306 UT

RAMEY SUNSPOT

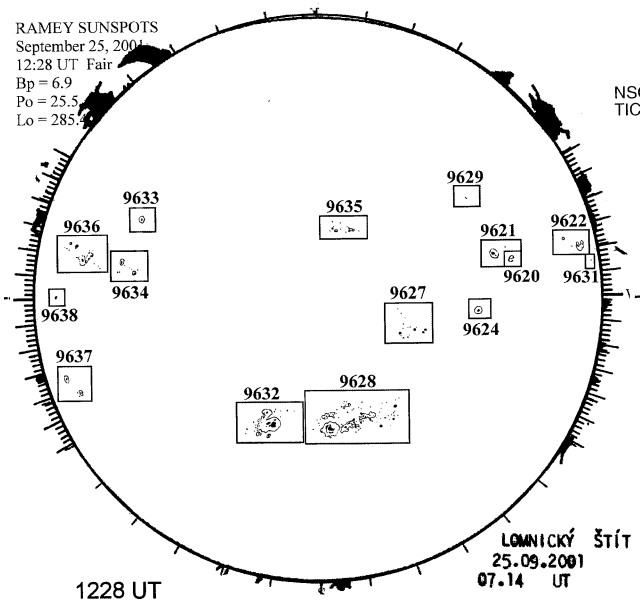

1228 UT
0714 UT LOMN Prom S

SACRAMENTO PEAK CORONA (1.15 Radii)

NSO / SACRAMENTO PEAK CORONAL DATA
TICK MARKS EVERY 20 MILLIONTHS

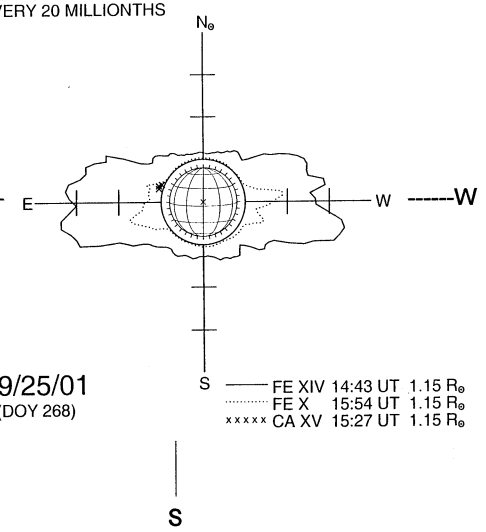

09/25/01
(DOY 268)

S