**SEPTEMBER 24, 2001 ( P= 25.35, Bo = 7.00, Lo = 304.90)**

KITT PEAK MAGNETOGRAM

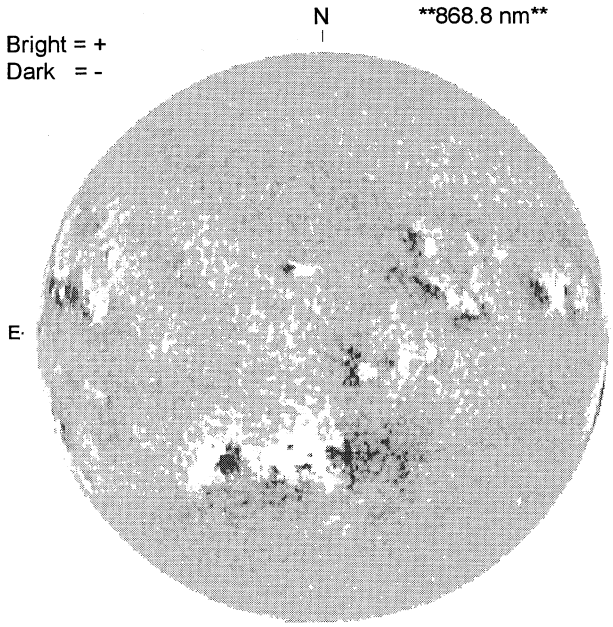


STANFORD MAGNETOGRAM

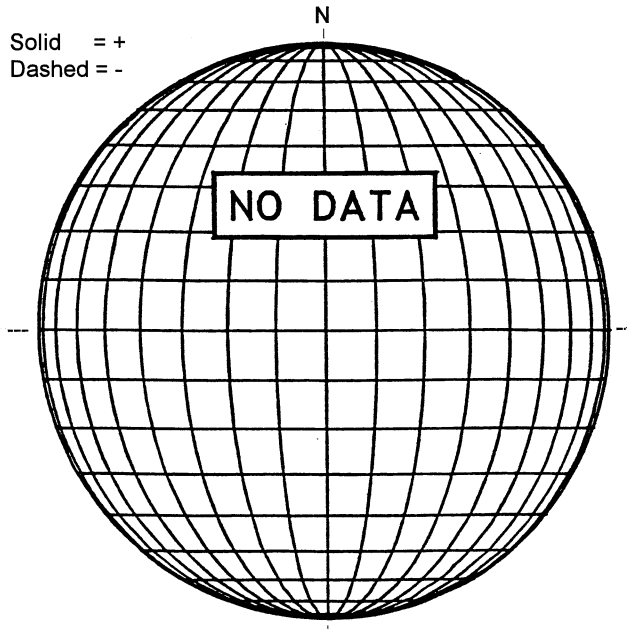


MT. WILSON MAGNETOGRAM

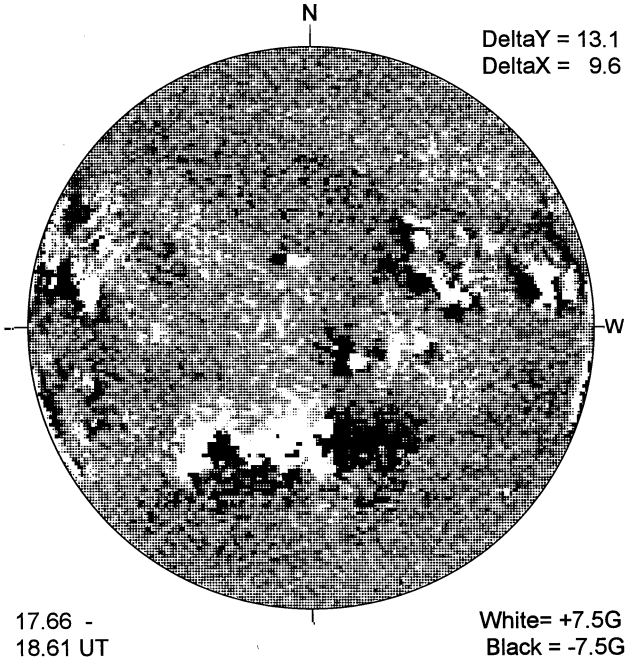


MEUDON H-ALPHA

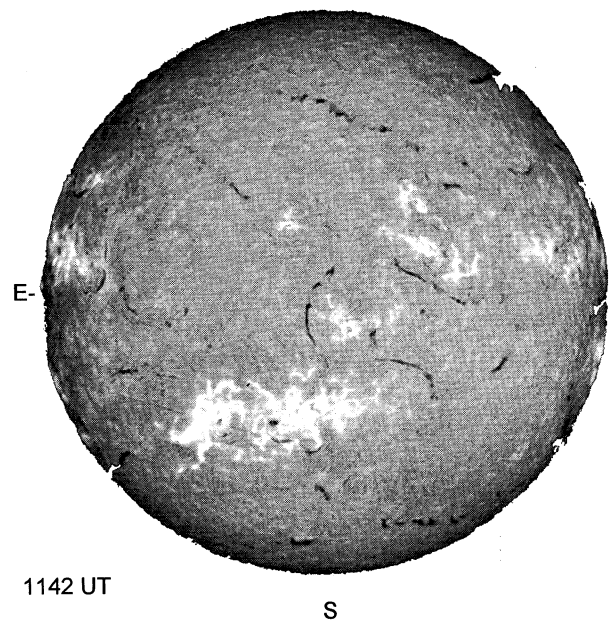


RAMEY SUNSPOT

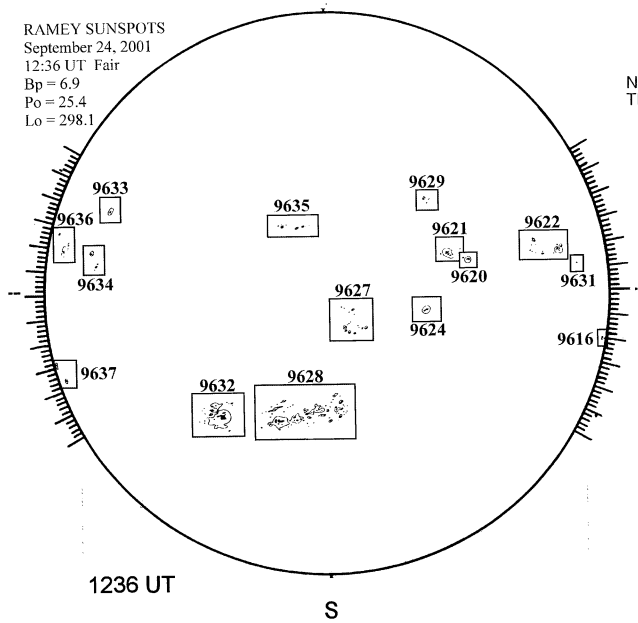

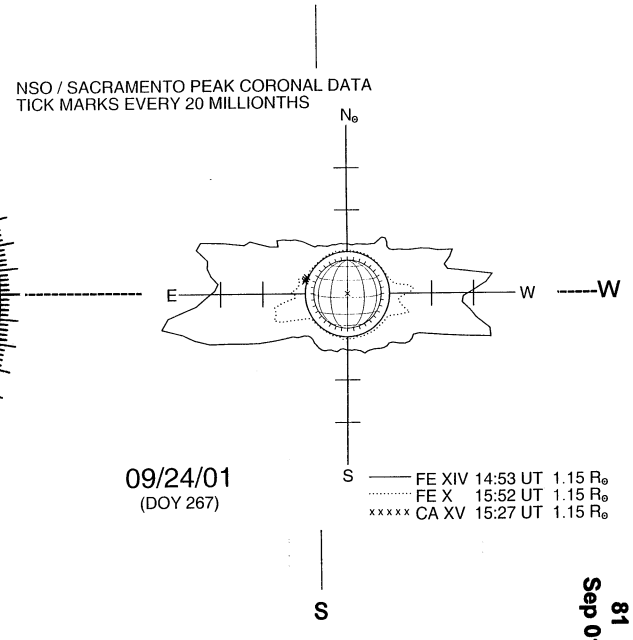
SACRAMENTO PEAK CORONA (1.15 Radii)