SEPTEMBER 22, 2001 (P= 25.11, Bo = 7.06, Lo = 331.29)

KITT PEAK MAGNETOGRAM

N **868.8 nm**

Bright = +
Dark = -

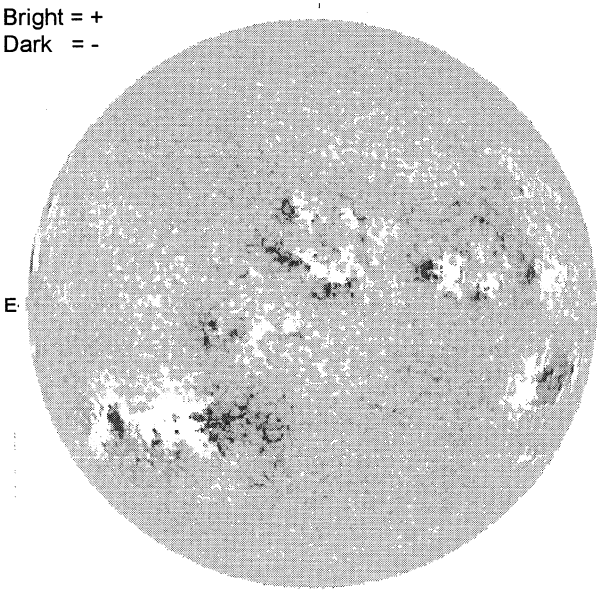

E

1454 UT

STANFORD MAGNETOGRAM

N

Solid = +
Dashed = -

2246 UT

MT. WILSON MAGNETOGRAM

N

DeltaY = 13.1
DeltaX = 9.6

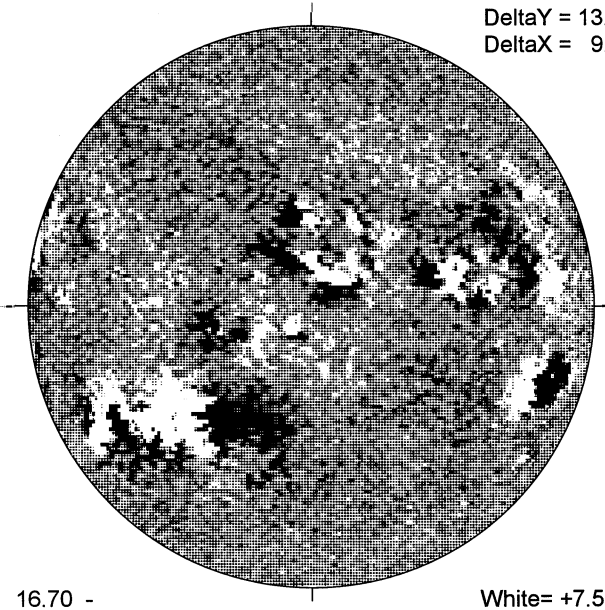

W

16.70 -
17.64 UT

White= +7.5G
Black = -7.5G

MEUDON H-ALPHA

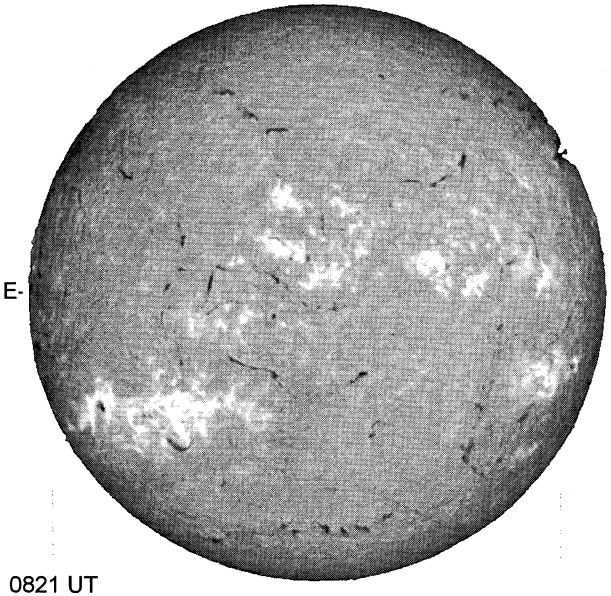

E

0821 UT

S

RAMEY SUNSPOT

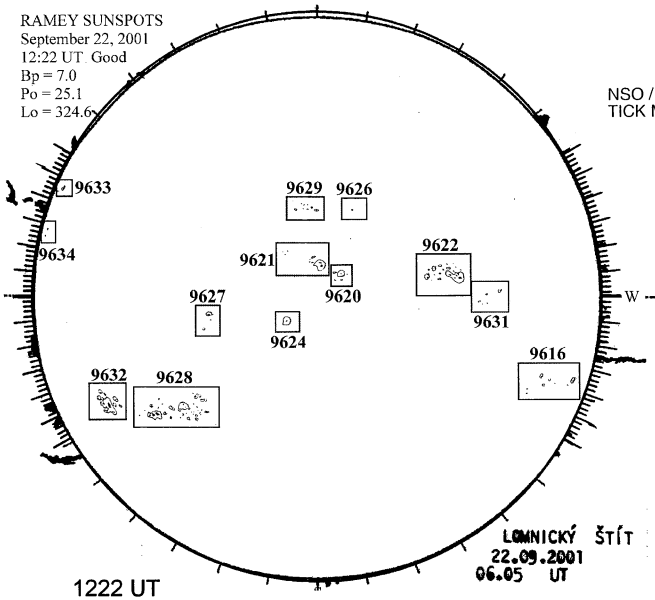

1222 UT
0605 UT LOMN Prom S

SACRAMENTO PEAK CORONA (1.15 Radii)

NSO / SACRAMENTO PEAK CORONAL DATA
TICK MARKS EVERY 20 MILLIONTHS

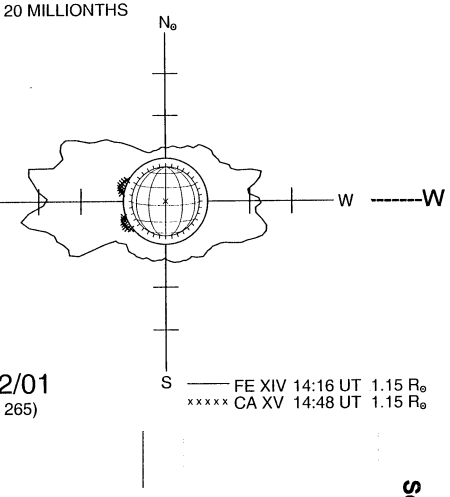

09/22/01
(DOY 265)

S