SEPTEMBER 19, 2001 (P= 24.70, Bo = 7.13, Lo = 10.89)

KITT PEAK MAGNETOGRAM

N **868.8 nm**

Bright = +
Dark = -

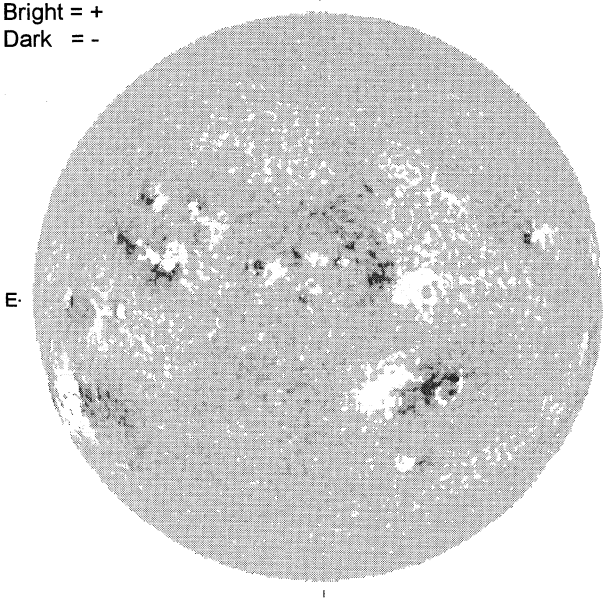

E

1723 UT

STANFORD MAGNETOGRAM

N

Solid = +
Dashed = -

2057 UT

MT. WILSON MAGNETOGRAM

N

DeltaY = 13.1
DeltaX = 9.6

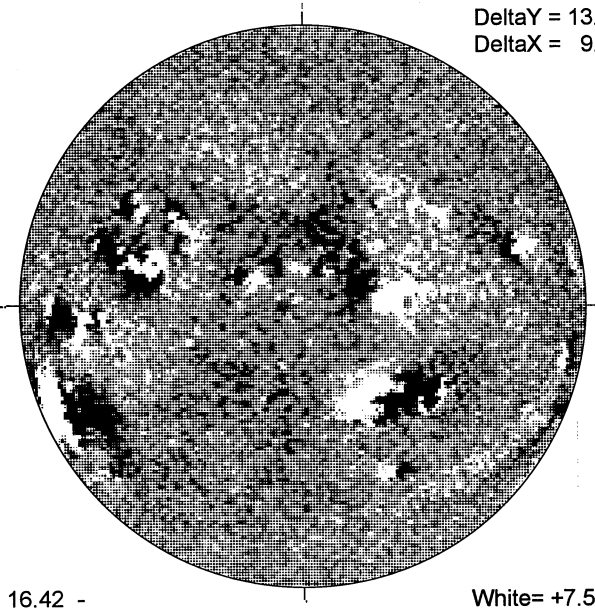

W

16.42 -
17.36 UT

White= +7.5G
Black = -7.5G

MEUDON H-ALPHA

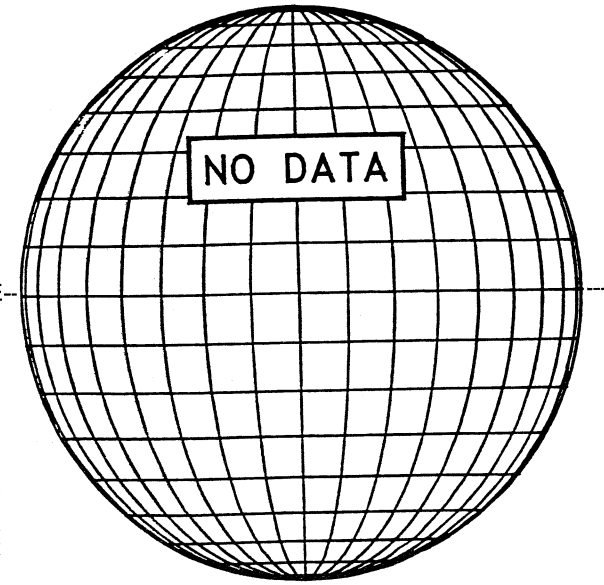

E

S

RAMEY SUNSPOT

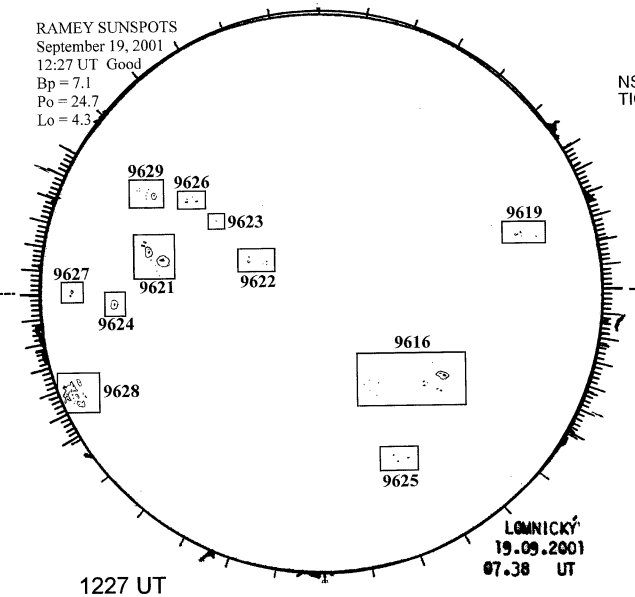

1227 UT
0738 UT LOMN Prom S

SACRAMENTO PEAK CORONA (1.15 Radii)

NSO / SACRAMENTO PEAK CORONAL DATA
TICK MARKS EVERY 20 MILLIONTHS

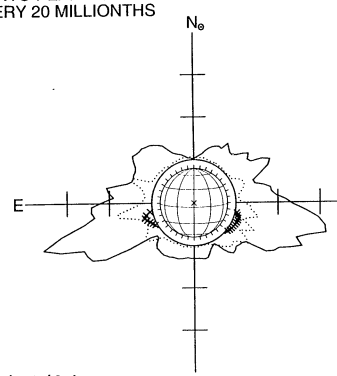

09/19/01
(DOY 262)

FE XIV 17:04 UT 1.15 R⊙
FE X 18:40 UT 1.15 R⊙
xxxxx CA XV 18:17 UT 1.15 R⊙

S