AUGUST 24, 2001 (P= 18.88, Bo = 7.01, Lo = 354.27)

KITT PEAK MAGNETOGRAM

N **868.8 nm**

Bright = +
Dark = -

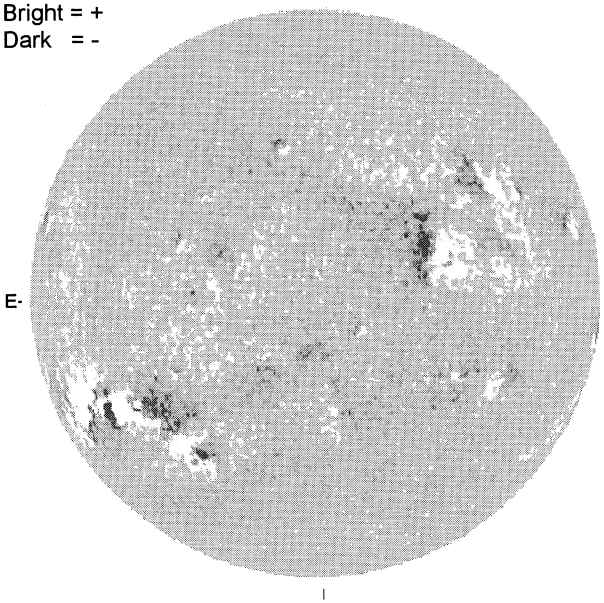

E-

1629 UT

STANFORD MAGNETOGRAM

N

Solid = +
Dashed = -

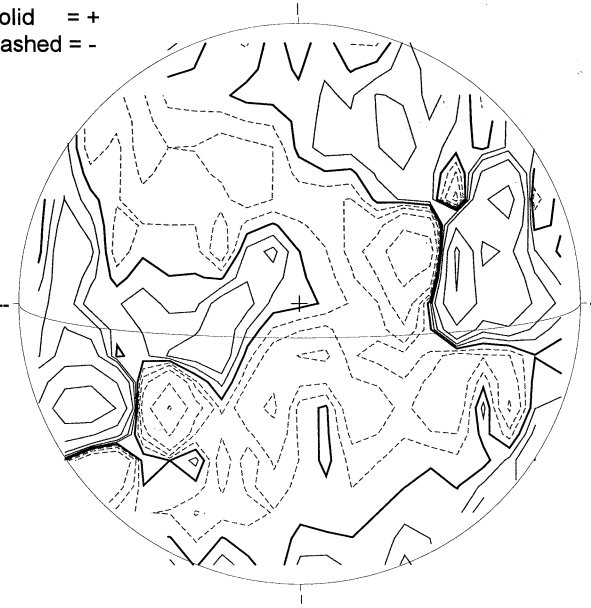

2225 UT

MT. WILSON MAGNETOGRAM

N

DeltaY = 13.1
DeltaX = 9.6

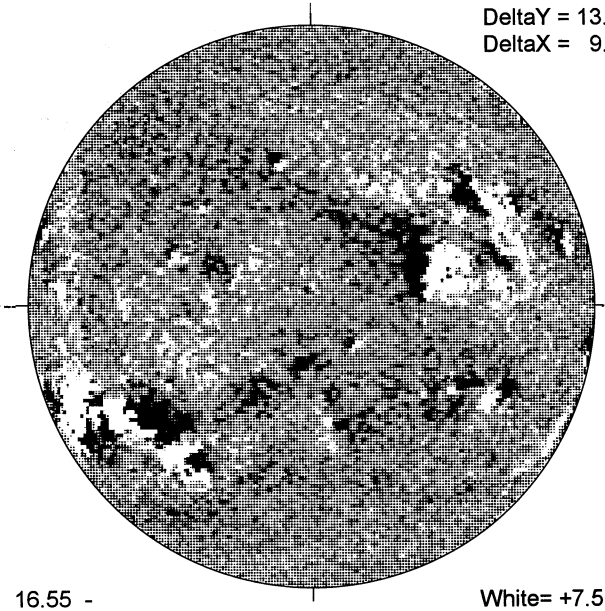

-W

16.55 -
17.48 UT

White= +7.5G
Black = -7.5G

MEUDON H-ALPHA

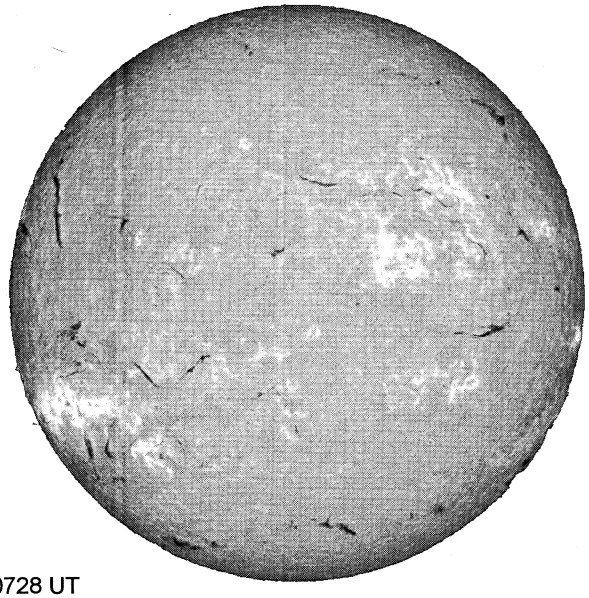

E-

0728 UT

S

RAMEY SUNSPOT

RAMEY SUNSPOTS
August 24, 2001
12:20 UT Fair
Bp = 7.0
Po = 19.0
Lo = 348.2

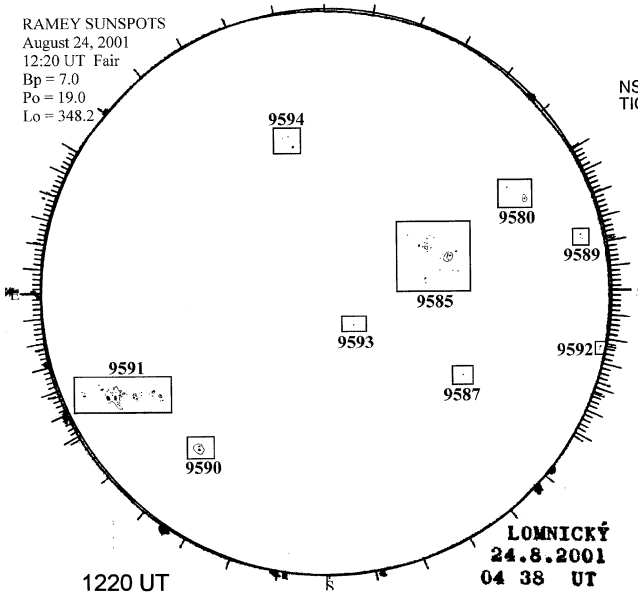

LOMNICKÝ
24.8.2001
04 38 UT

1220 UT
0438 UT LOMN Prom S

SACRAMENTO PEAK CORONA (1.15 Radii)

NSO / SACRAMENTO PEAK CORONAL DATA
TICK MARKS EVERY 20 MILLIONTHS

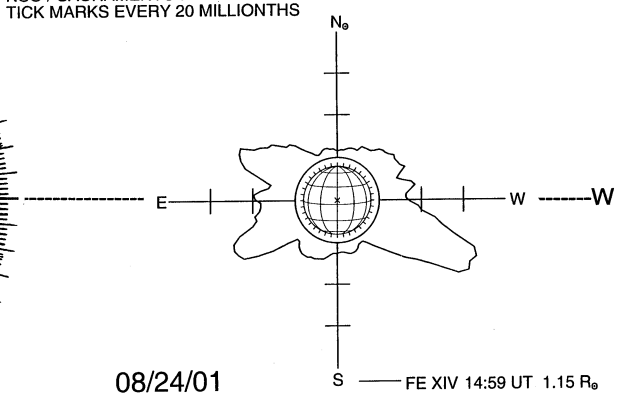

08/24/01
(DOY 236)

FE XIV 14:59 UT 1.15 R⊙

S

79
Aug 01