AUGUST 22, 2001 (P= 18.28, Bo = 6.94, Lo = 20.70)

KITT PEAK MAGNETOGRAM

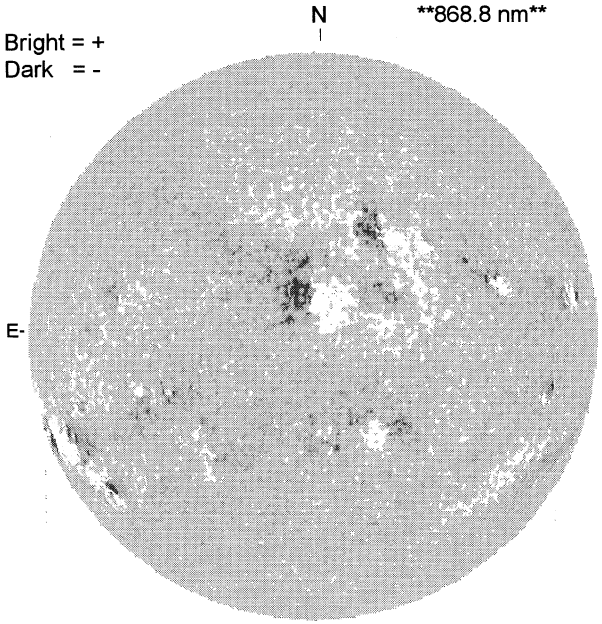

STANFORD MAGNETOGRAM

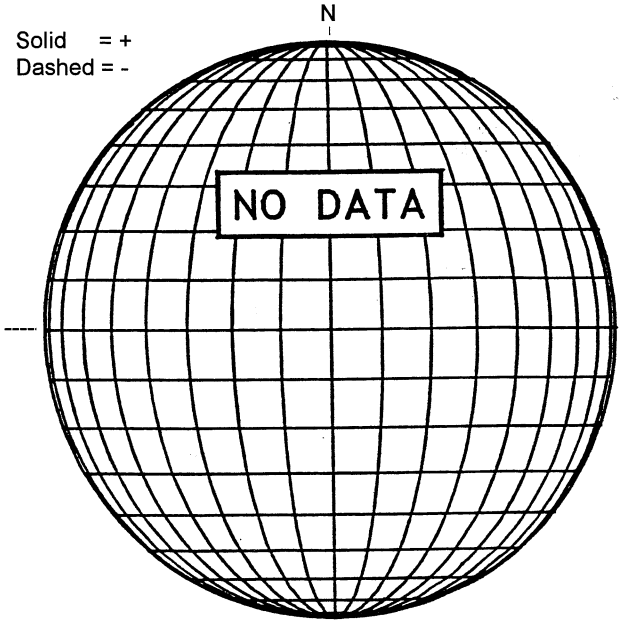

MT. WILSON MAGNETOGRAM

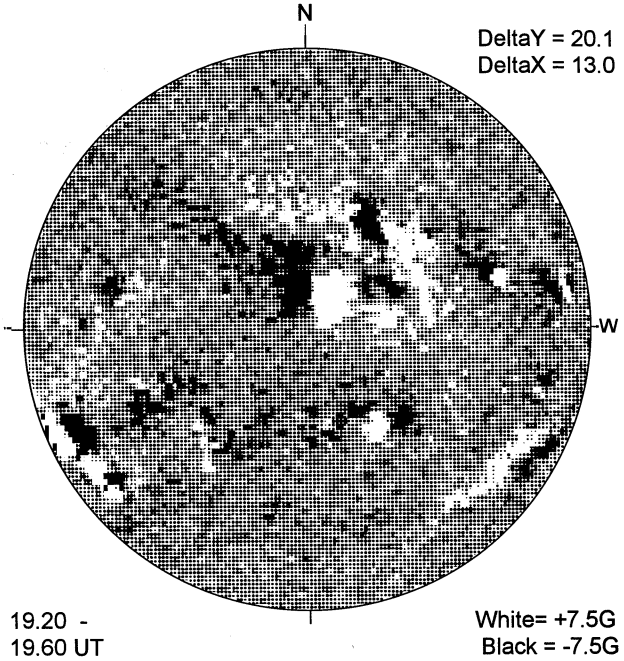

MEUDON H-ALPHA

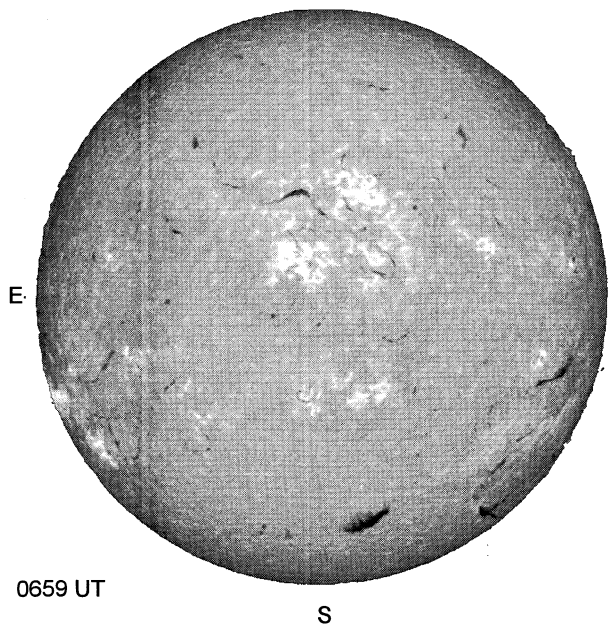

RAMEY SUNSPOT

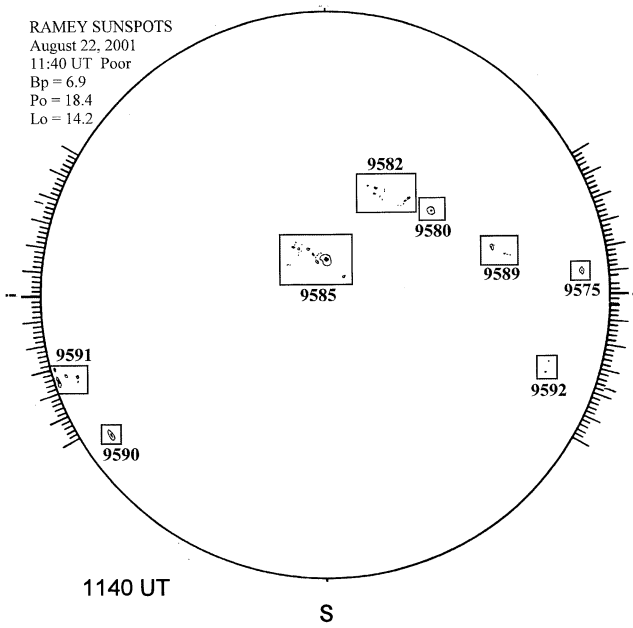

SACRAMENTO PEAK CORONA (1.15 Radii)----

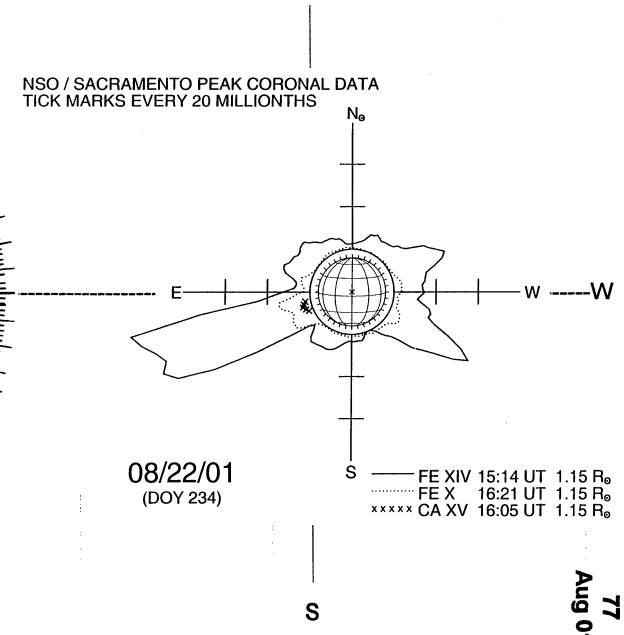

77
Aug 01