# AUGUST 13, 2001 ( P= 15.32, Bo = 6.55, Lo = 139.65)

## KITT PEAK MAGNETOGRAM

N **868.8 nm**

Bright = +
Dark = -

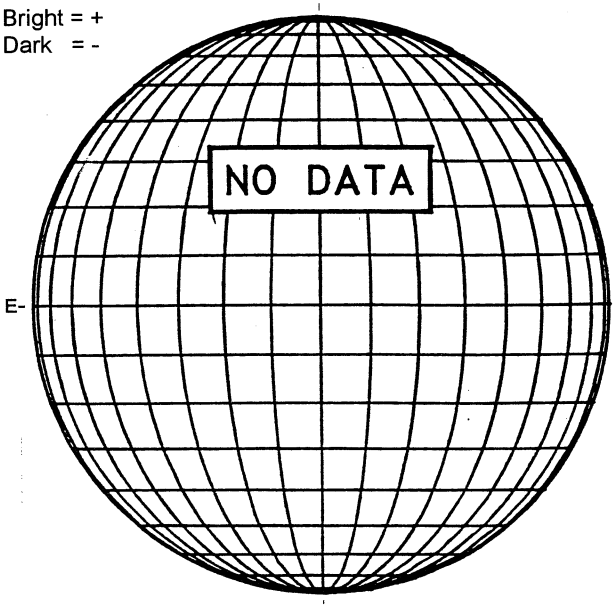


E-

## STANFORD MAGNETOGRAM

N

Solid = +
Dashed = -

1745 UT

## MT. WILSON MAGNETOGRAM

N

DeltaY = 13.0
DeltaX = 9.6

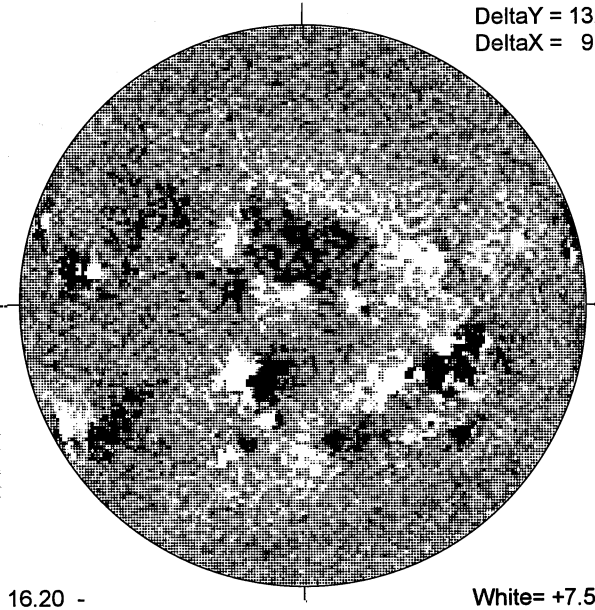

-W

16.20 -
17.13 UT

White= +7.5G
Black = -7.5G

## MEUDON H-ALPHA

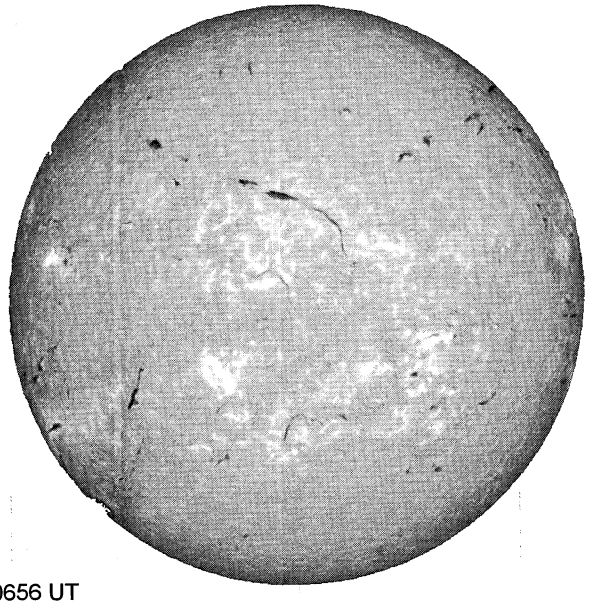

E

0656 UT

S

## RAMEY SUNSPOT

RAMEY SUNSPOTS
August 13, 2001
12:51 UT Poor
Bp = 6.5
Po = 15.5
Lo = 132.6

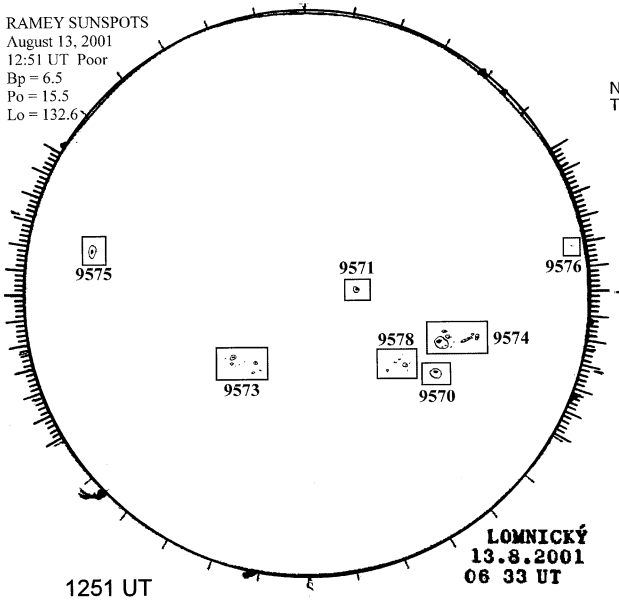


1251 UT
0633 UT LOMN Prom S

## SACRAMENTO PEAK CORONA (1.15 Radii)----

NSO / SACRAMENTO PEAK CORONAL DATA
TICK MARKS EVERY 20 MILLIONTHS

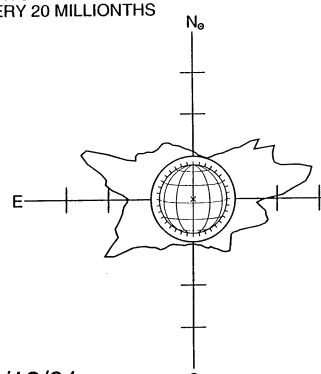


-----W

08/13/01
(DOY 225)

FE XIV 15:40 UT 1.15 R⊙

S