JULY 23, 2001 (P= 7.12, Bo = 5.07, Lo = 57.37)

KITT PEAK MAGNETOGRAM

868.8 nm

Bright = +
Dark = -

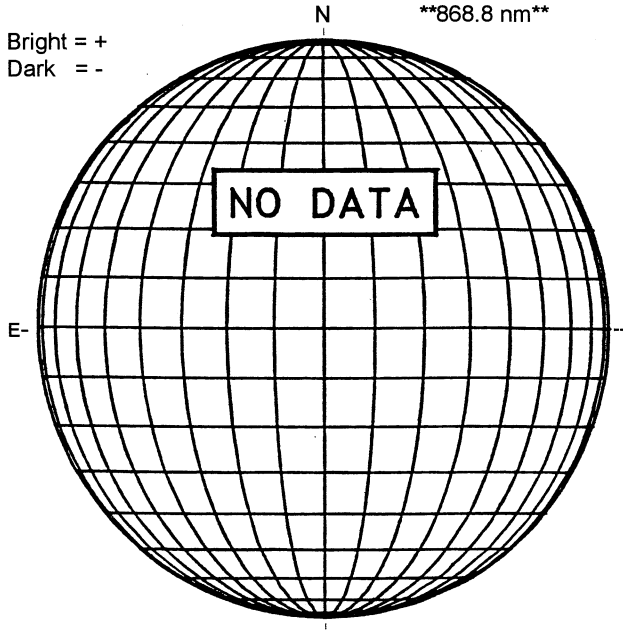

STANFORD MAGNETOGRAM

Solid = +
Dashed = -

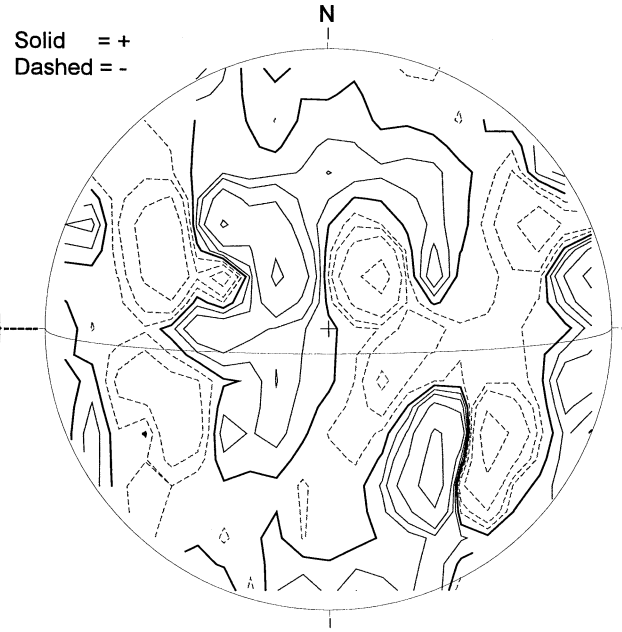

2233 UT

MT. WILSON MAGNETOGRAM

DeltaY = 13.1
DeltaX = 9.6

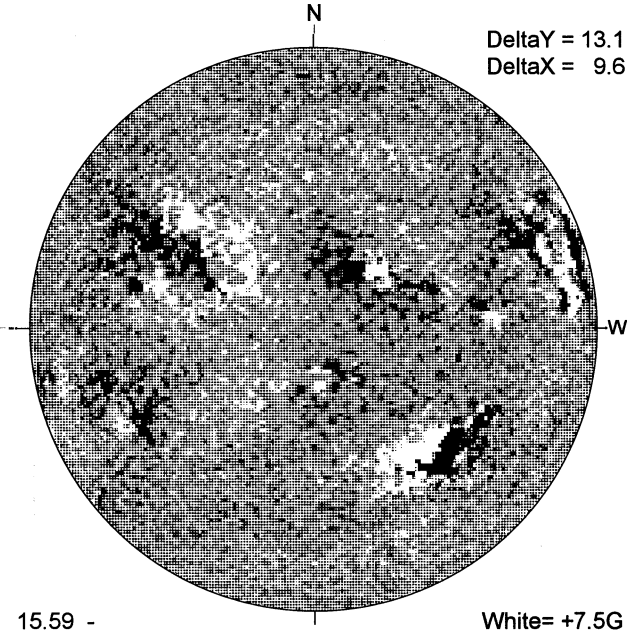

15.59 -
16.52 UT

White= +7.5G
Black = -7.5G

MEUDON H-ALPHA

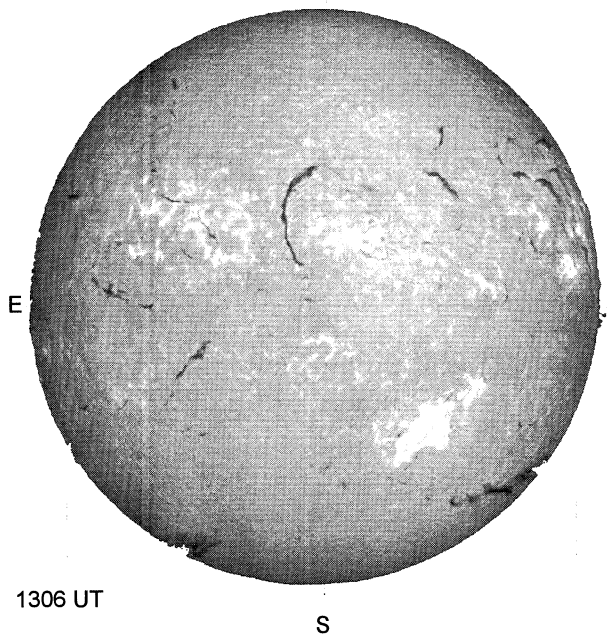

1306 UT

HOLLOMAN SUNSPOT

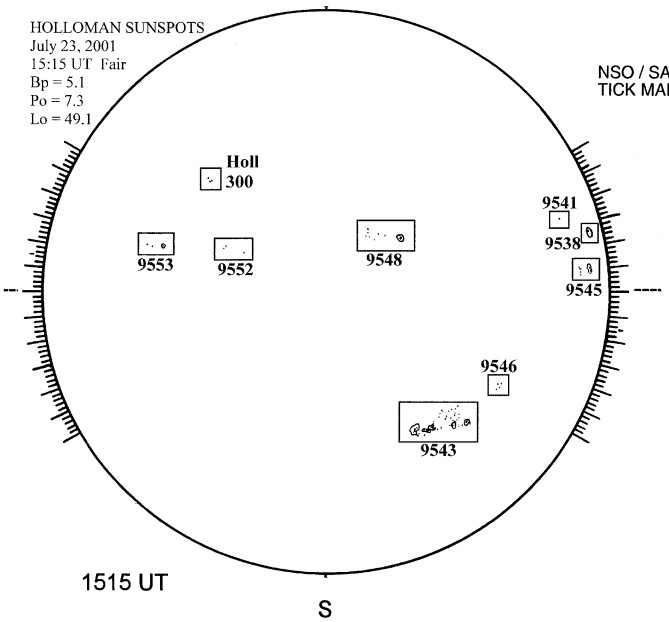

1515 UT
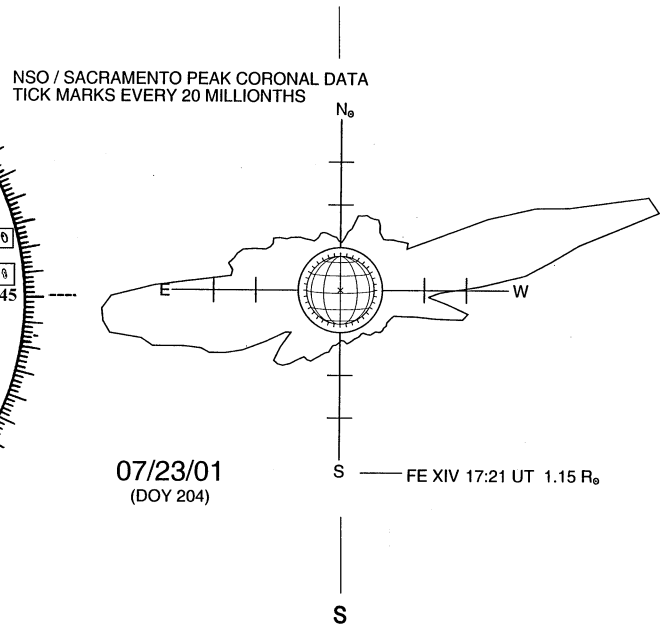
SACRAMENTO PEAK CORONA (1.15 Radii)