JULY 19, 2001 (P= 5.40, Bo = 4.72, Lo = 110.29)

KITT PEAK MAGNETOGRAM

N

868.8 nm

Bright = +
Dark = -

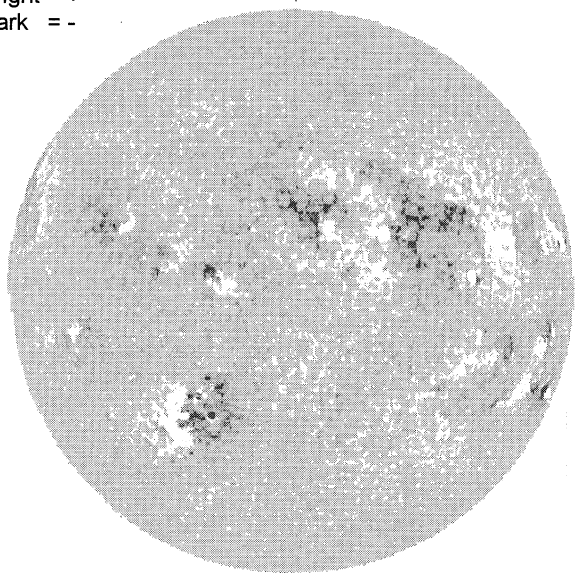

E-

1622 UT

STANFORD MAGNETOGRAM

N

Solid = +
Dashed = -

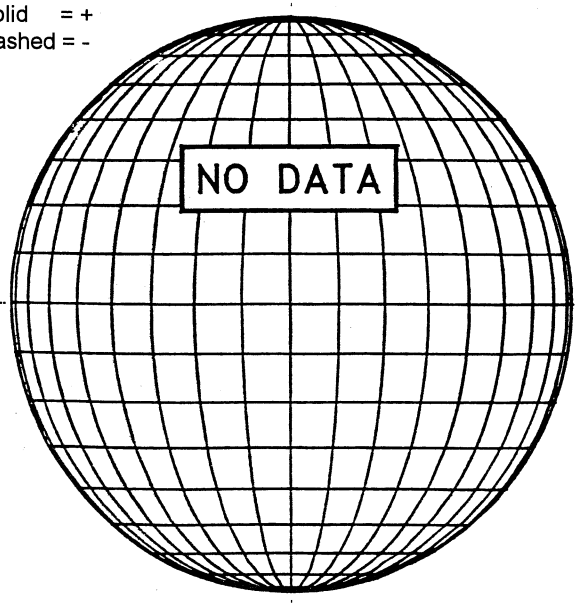

MT. WILSON MAGNETOGRAM

N

DeltaY = 13.1
DeltaX = 9.6

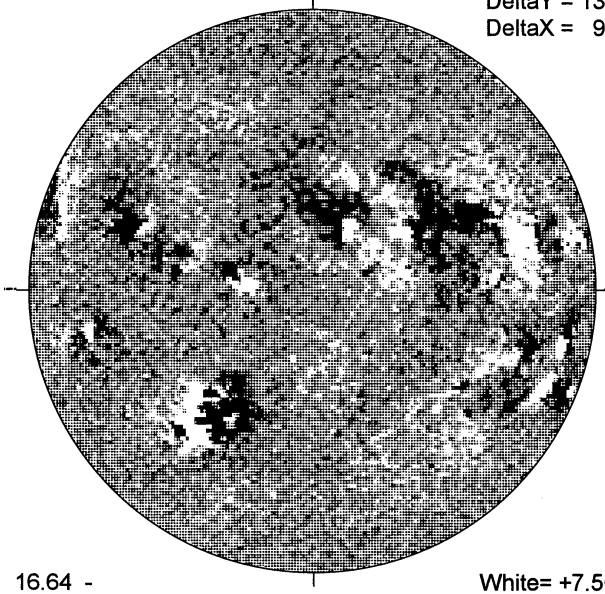

W

16.64 -
17.56 UT

White= +7.5G
Black = -7.5G

MEUDON H-ALPHA

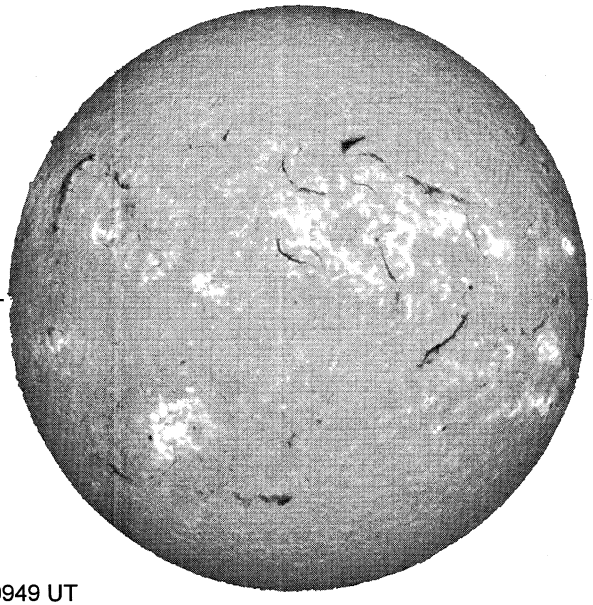

E-

0949 UT

S

HOLLOMAN SUNSPOT

HOLLOMAN SUNSPOTS
July 19, 2001
15:00 UT Fair
Bp = 4.7
Po = 5.6
Lo = 102.6

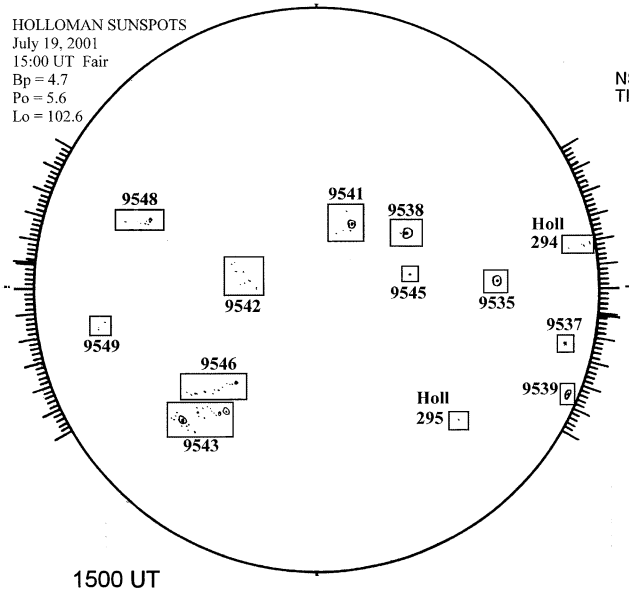

1500 UT

S

SACRAMENTO PEAK CORONA (1.15 Radii)----

NSO / SACRAMENTO PEAK CORONAL DATA
TICK MARKS EVERY 20 MILLIONTHS

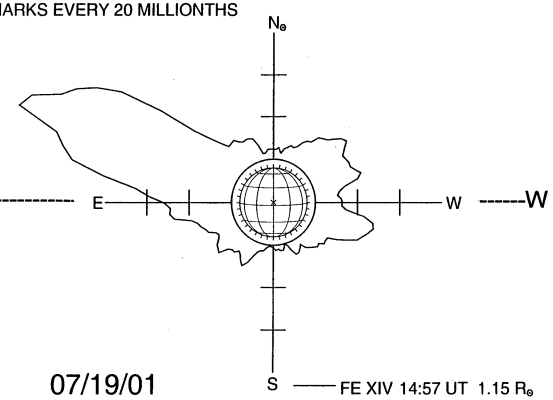

07/19/01
(DOY 200)

FE XIV 14:57 UT 1.15 R⊙

S