JULY 15, 2001 (P= 3.64, Bo = 4.34, Lo = 163.22)

KITT PEAK MAGNETOGRAM

Bright = +
Dark = -

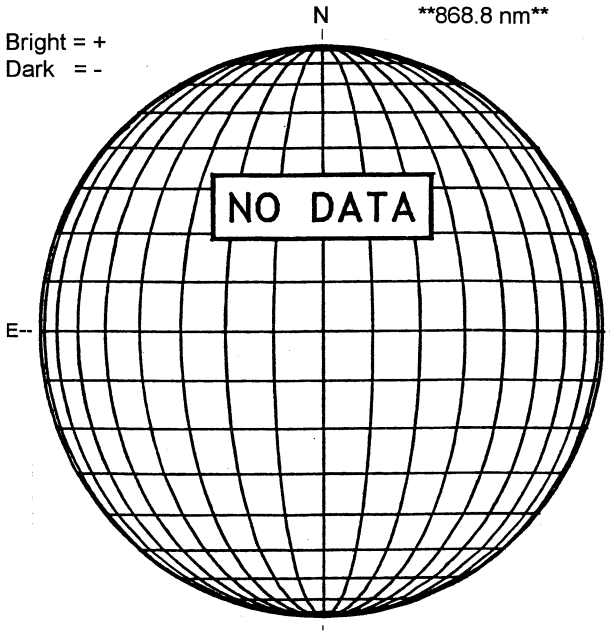

STANFORD MAGNETOGRAM

Solid = +
Dashed = -

1635 UT

MT. WILSON MAGNETOGRAM

DeltaY = 13.1
DeltaX = 9.6

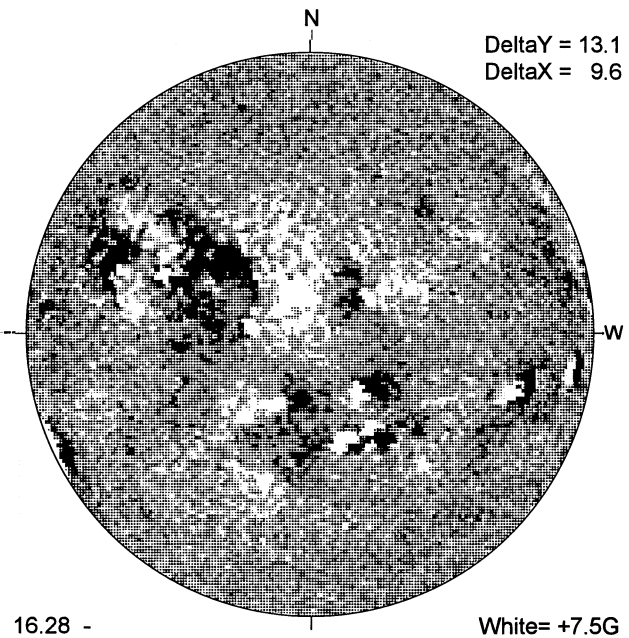

16.28 -
17.20 UT

White= +7.5G
Black = -7.5G

MEUDON H-ALPHA

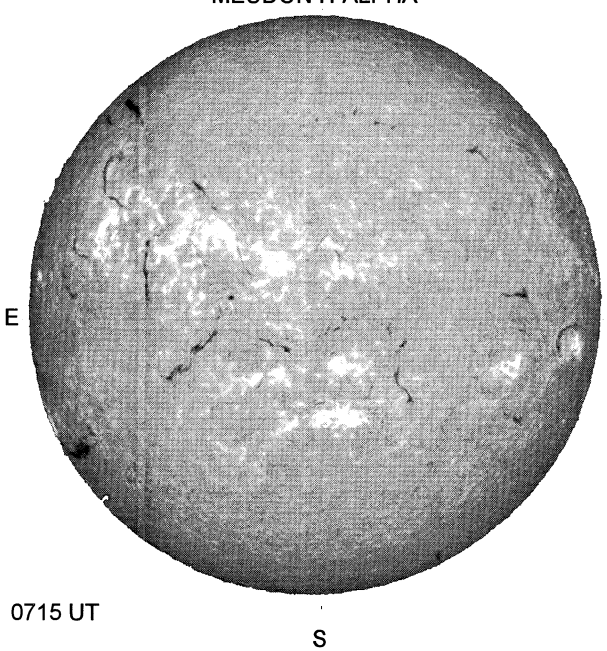

0715 UT

HOLLOMAN SUNSPOT

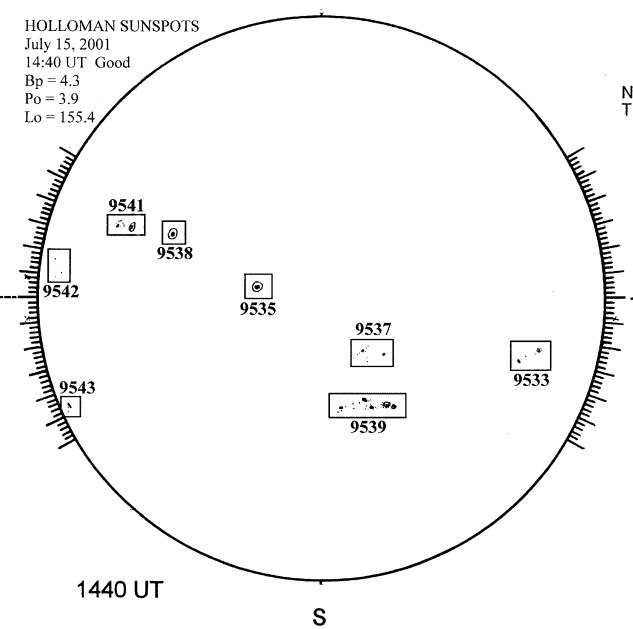

1440 UT

SACRAMENTO PEAK CORONA (1.15 Radii)

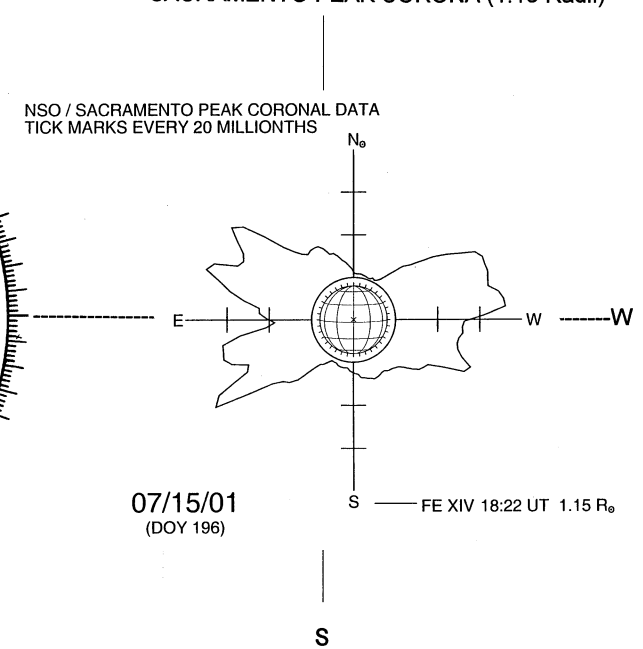

07/15/01
(DOY 196)