JULY 12, 2001 (P= 2.30, Bo = 4.04, Lo = 202.92)

KITT PEAK MAGNETOGRAM

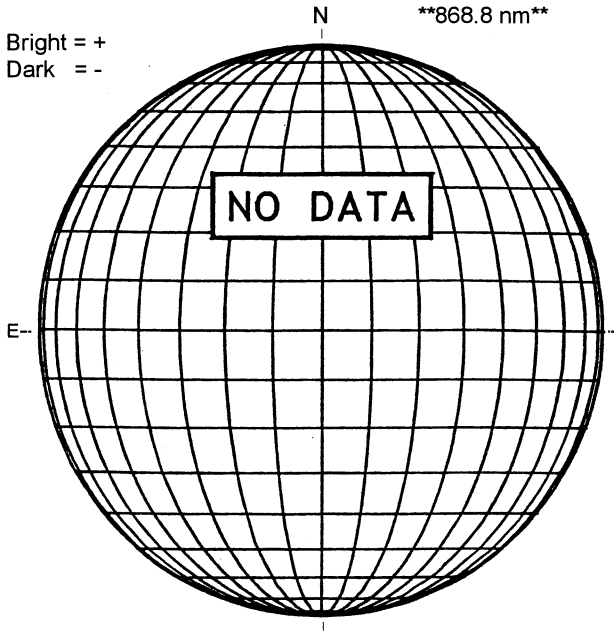

STANFORD MAGNETOGRAM

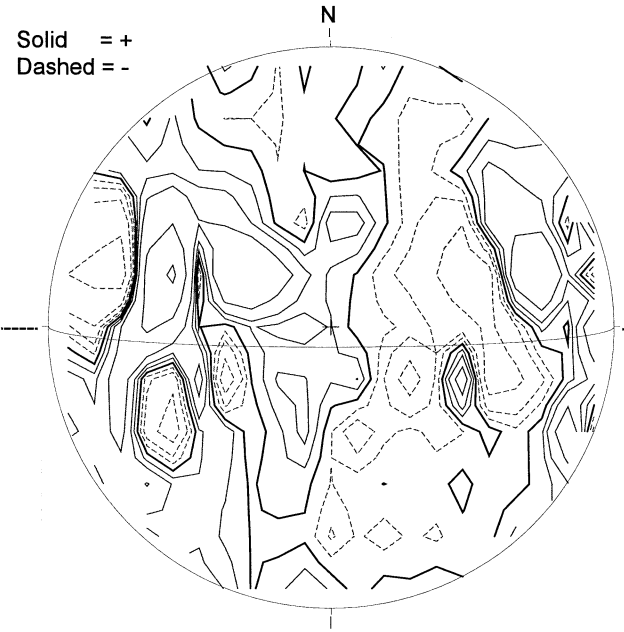

2146 UT

MT. WILSON MAGNETOGRAM

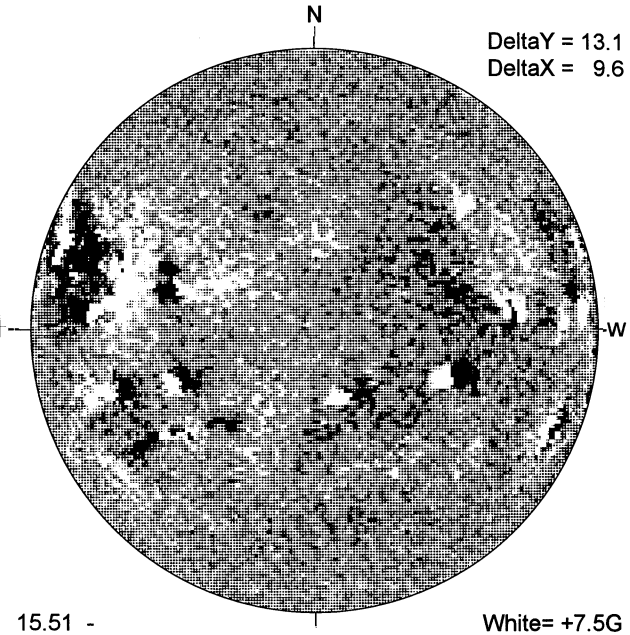

15.51 -
16.43 UT

White= +7.5G
Black = -7.5G

---- MEUDON H-ALPHA

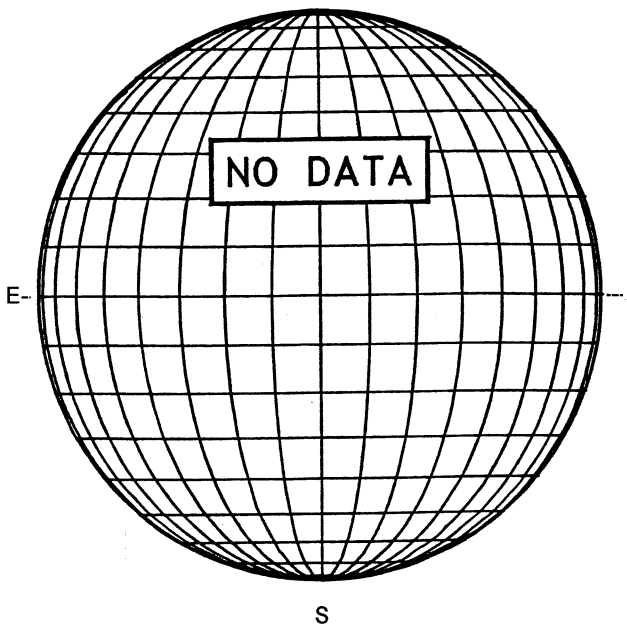

RAMEY SUNSPOTS

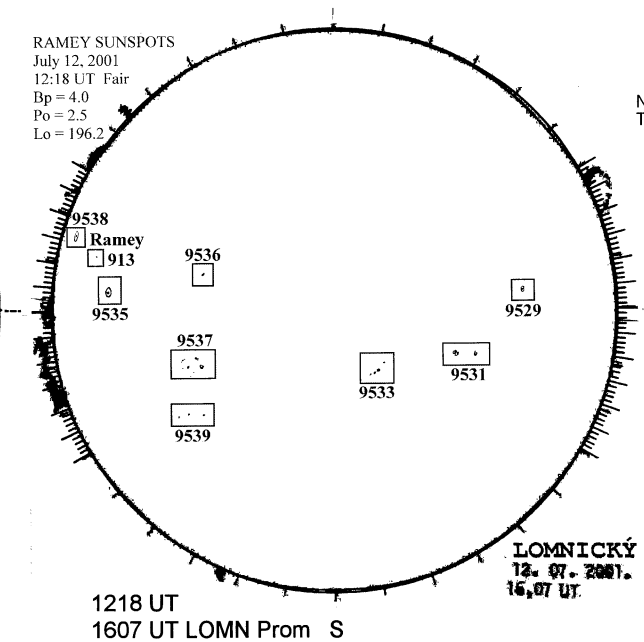

1218 UT
1607 UT LOMN Prom S

SACRAMENTO PEAK CORONA (1.15 Radii)----

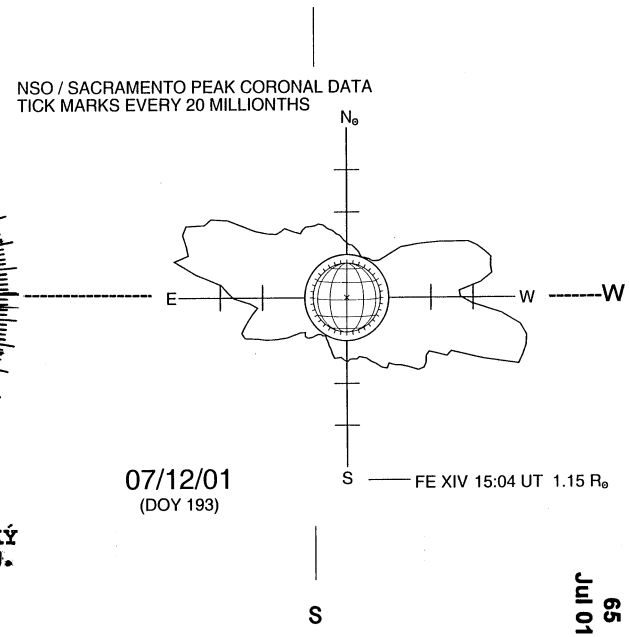

65
Jul 01