JULY 11, 2001 (P= 1.85, Bo = 3.94, Lo = 216.15)

KITT PEAK MAGNETOGRAM

Bright = +
Dark = -

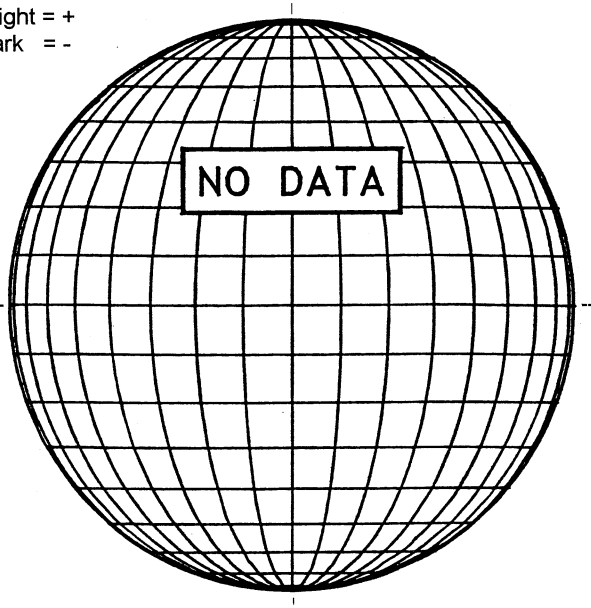

STANFORD MAGNETOGRAM

Solid = +
Dashed = -

2131 UT

MT. WILSON MAGNETOGRAM

DeltaY = 13.1
DeltaX = 9.6

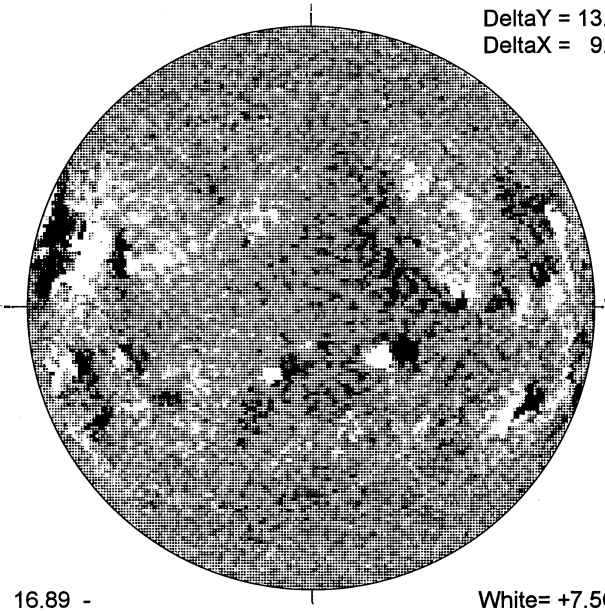

16.89 -
17.81 UT

White= +7.5G
Black = -7.5G

MEUDON H-ALPHA

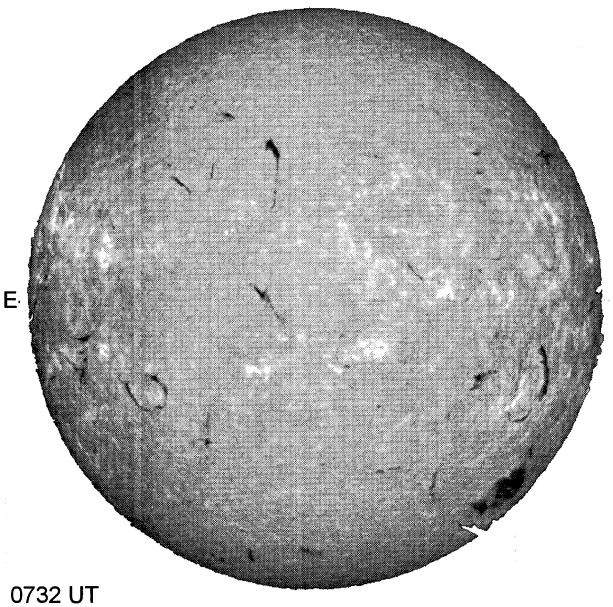

0732 UT

S

RAMEY SUNSPOTS

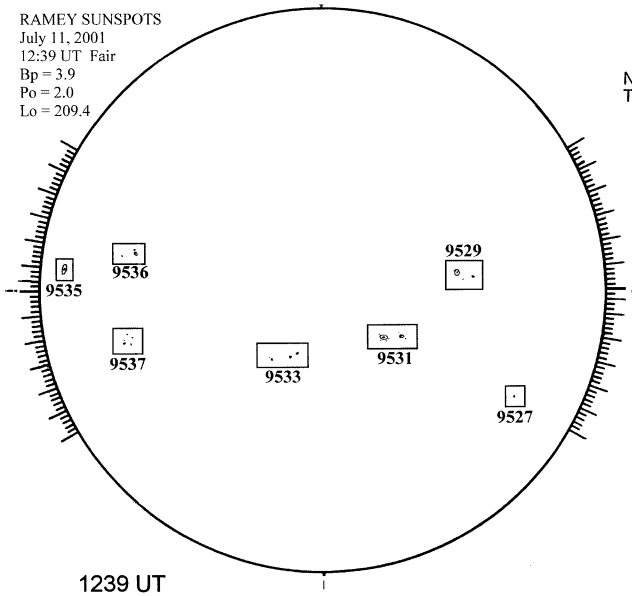

1239 UT

S

SACRAMENTO PEAK CORONA (1.15 Radii)

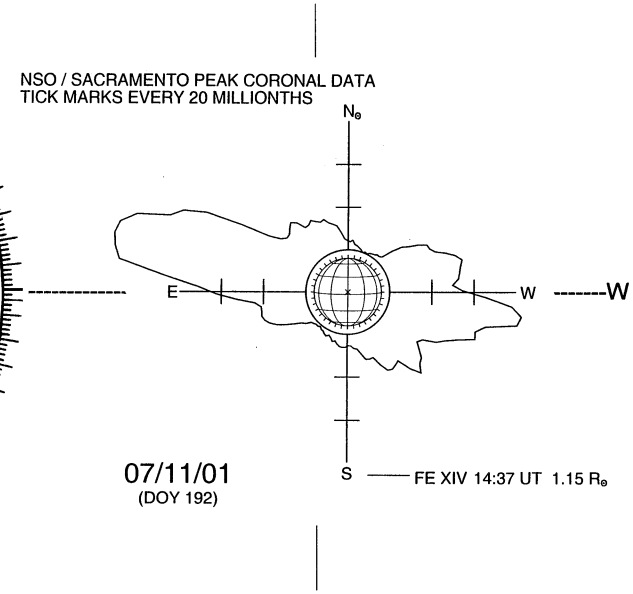

S