JULY 10, 2001 (P= 1.40, Bo = 3.84 Lo = 229.39)

KITT PEAK MAGNETOGRAM

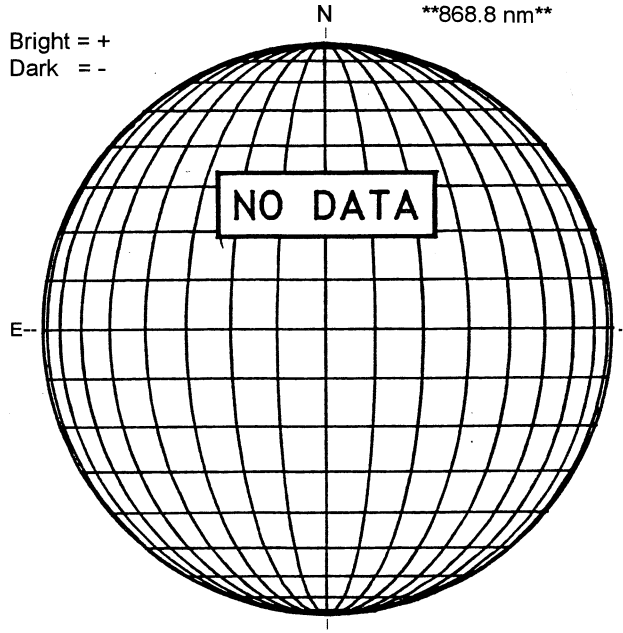

STANFORD MAGNETOGRAM

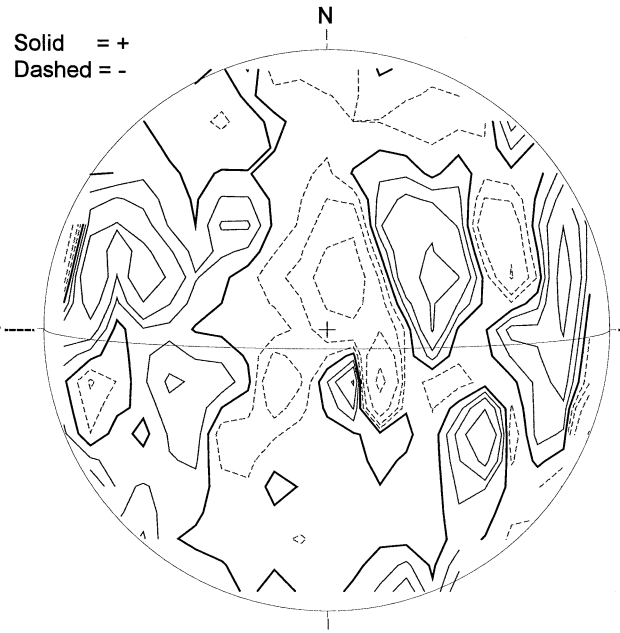

MT. WILSON MAGNETOGRAM

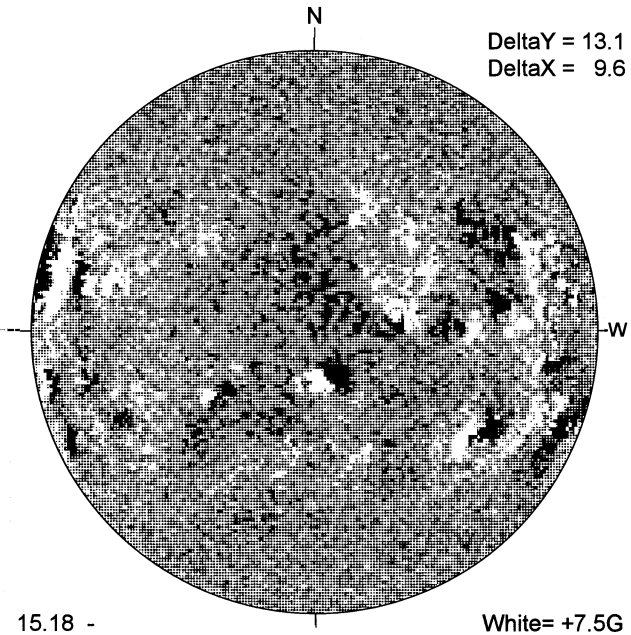

MEUDON H-ALPHA

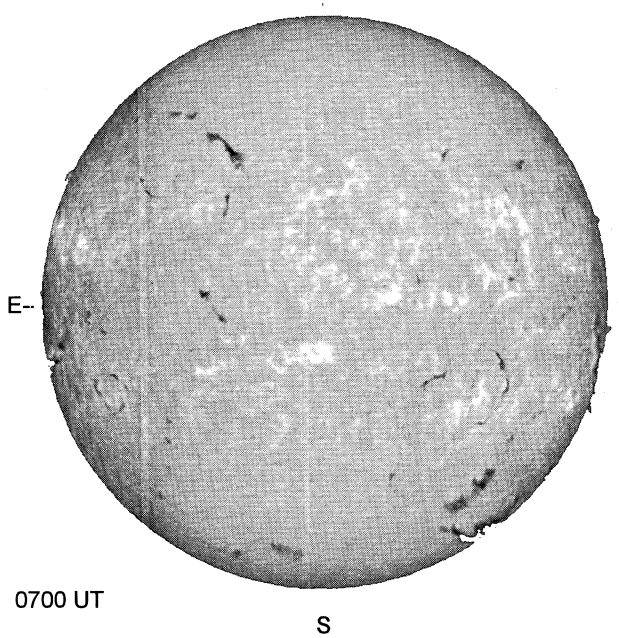

RAMEY SUNSPOTS

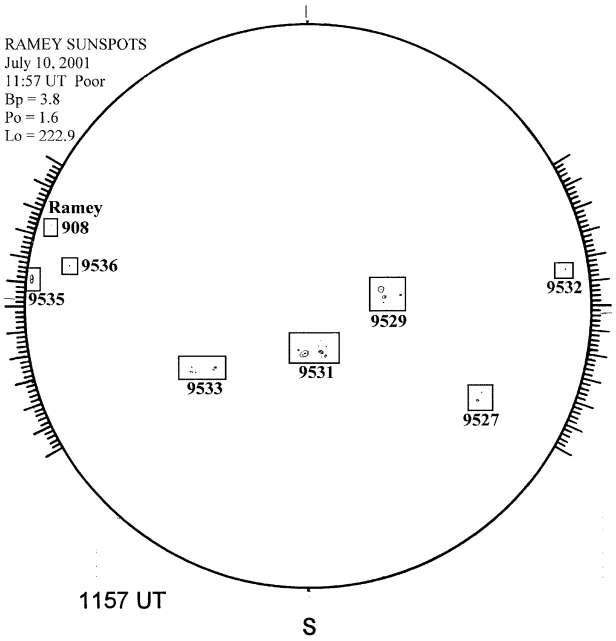
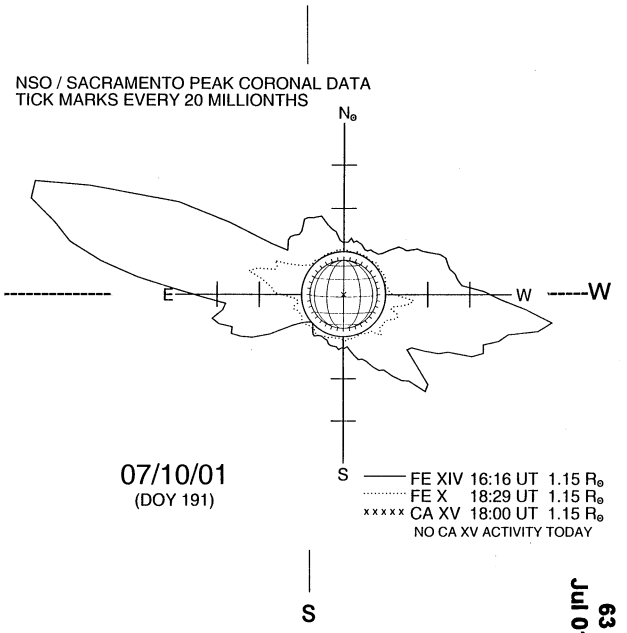
SACRAMENTO PEAK CORONA (1.15 Radii)----