JULY 9, 2001 (P= 0.95, Bo = 3.74, Lo = 242.62)

KITT PEAK MAGNETOGRAM

Bright = +
Dark = -

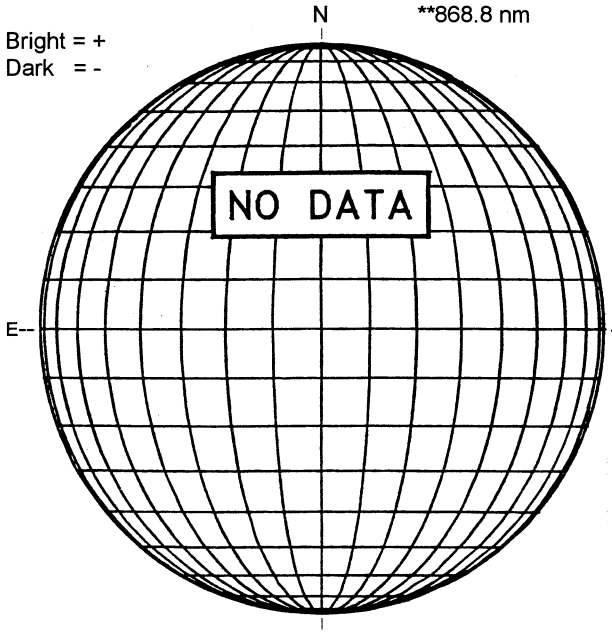

STANFORD MAGNETOGRAM

Solid = +
Dashed = -

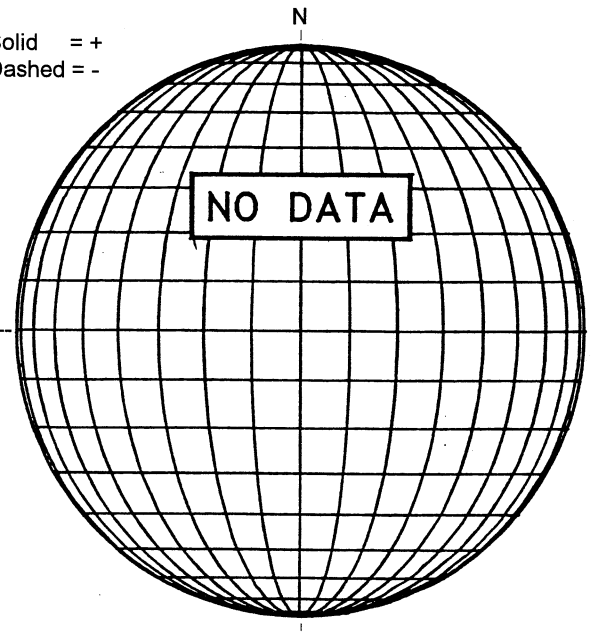

MT. WILSON MAGNETOGRAM

DeltaY = 13.1
DeltaX = 9.6

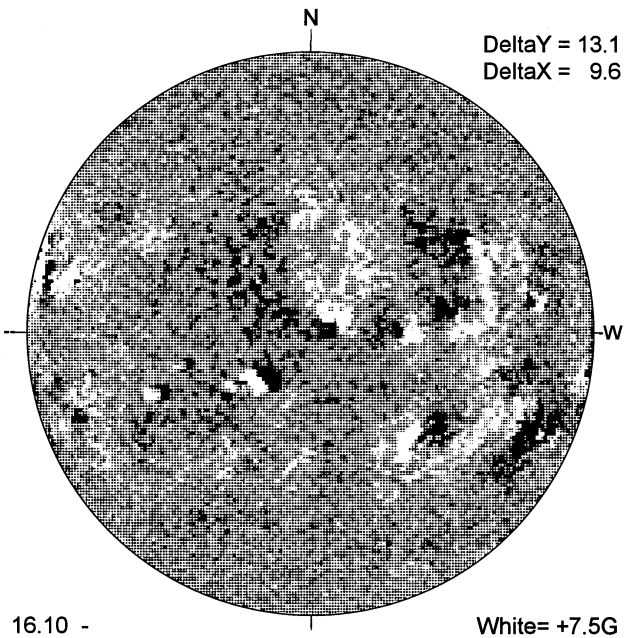

16.10 -
17.02 UT

White= +7.5G
Black = -7.5G

MEUDON H-ALPHA

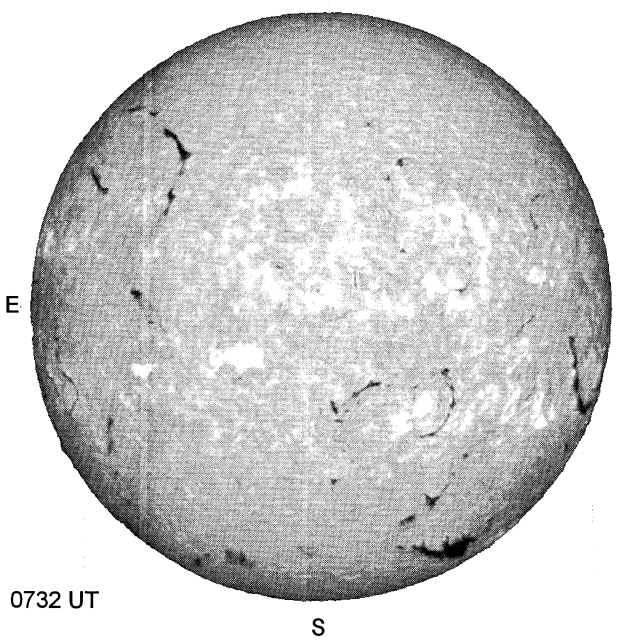

0732 UT

HOLLOMAN SUNSPOT

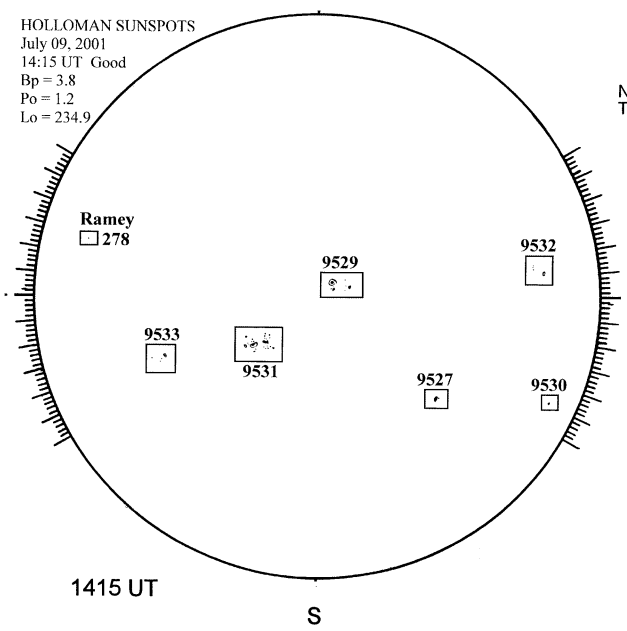

1415 UT

SACRAMENTO PEAK CORONA (1.15 Radii)

NSO / SACRAMENTO PEAK CORONAL DATA
TICK MARKS EVERY 20 MILLIONTHS

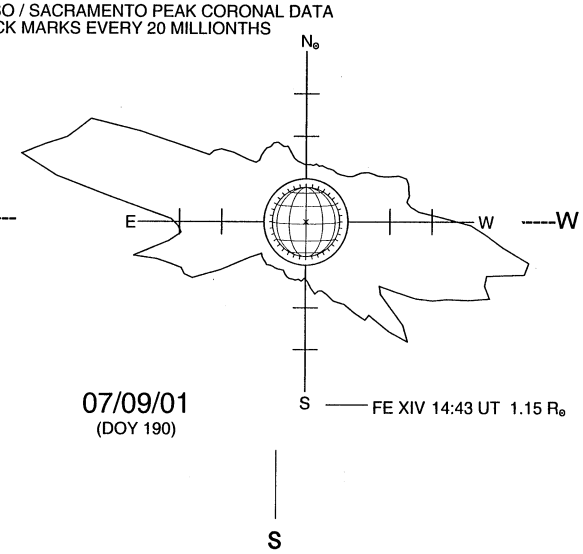

07/09/01
(DOY 190)

FE XIV 14:43 UT 1.15 R⊙