JULY 8, 2001 (P= 0.50, Bo = 3.63, Lo = 255.86)

KITT PEAK MAGNETOGRAM

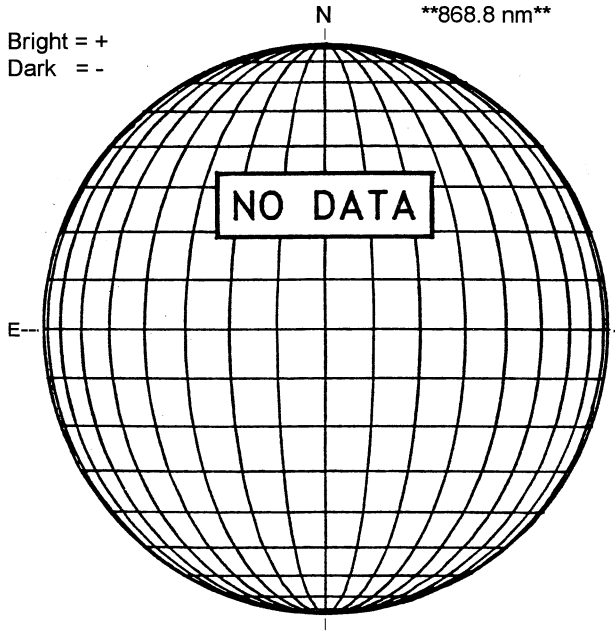

STANFORD MAGNETOGRAM

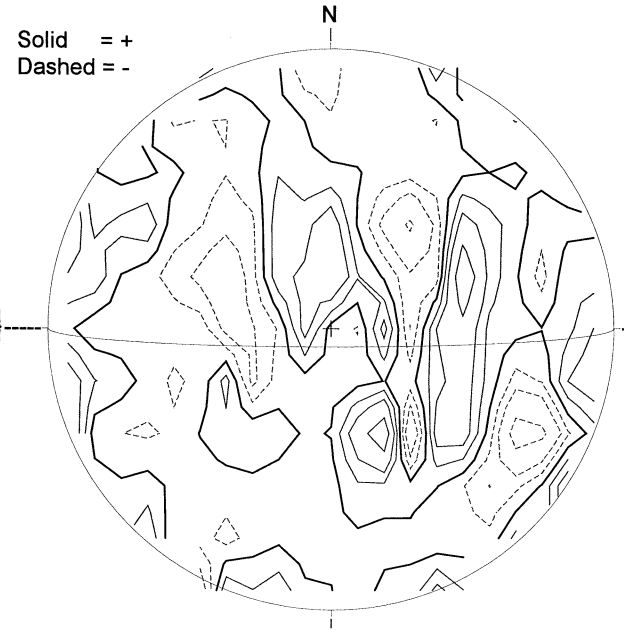

2006 UT

MT. WILSON MAGNETOGRAM

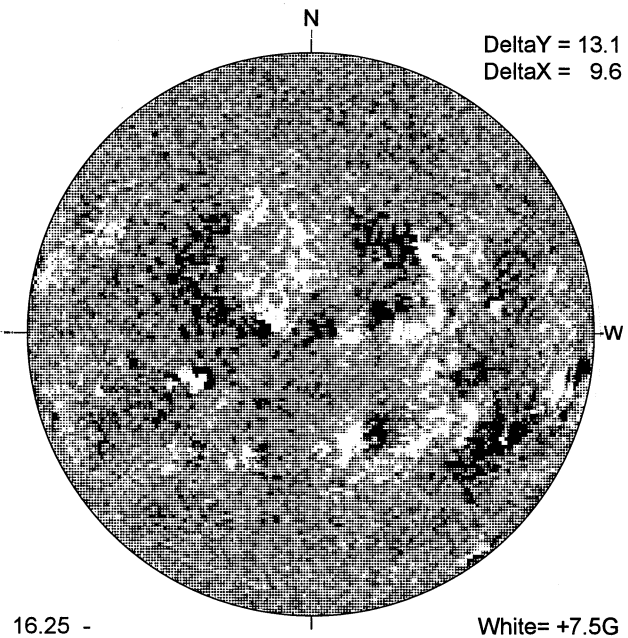

16.25 -
17.17 UT

White= +7.5G
Black = -7.5G

MEUDON H-ALPHA

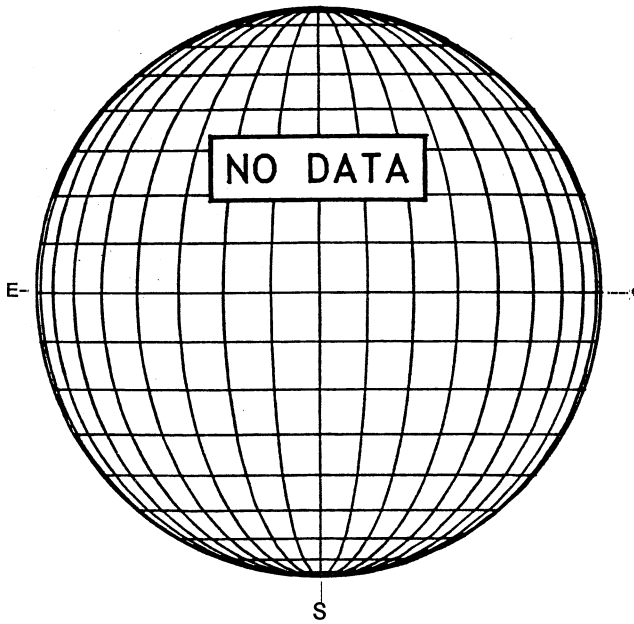

RAMEY SUNSPOT

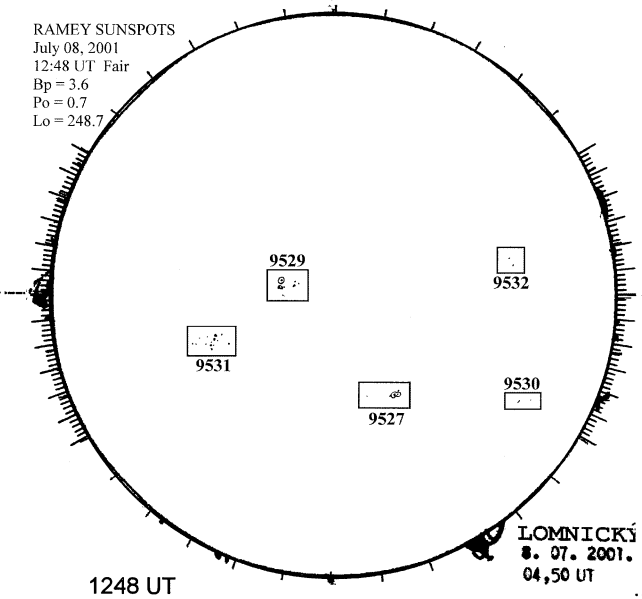

1248 UT
0450 UT LOMN Prom

LOMNICKY PEAK CORONA (1.04 Radii)----

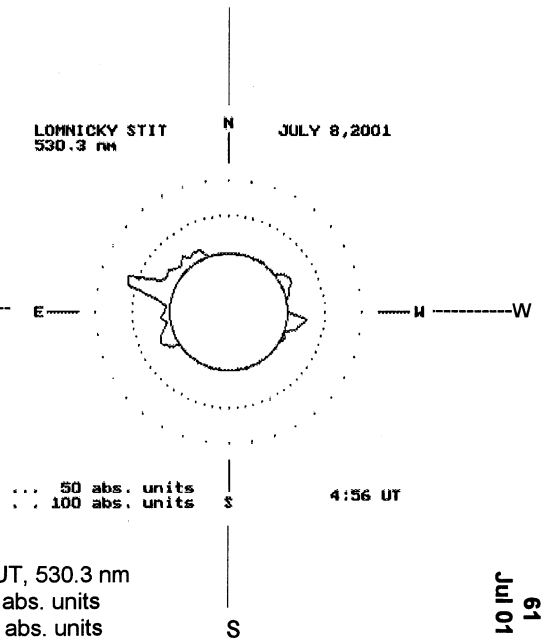

456 UT, 530.3 nm
.... 50 abs. units
. . 100 abs. units